CATALOG K

THOMAS MADDOCK

QUALITY PLUMBING FIXTURES

THOMAS MADDOCK'S SONS COMPANY

TRENTON · NEW JERSEY · U·S·A·

Envelope contains:

Miscellaneous company correspondence
[13 leaves]

Pitt. C.
& Seaman 9/90

FILE COPY
REPLACE IN FILE PROMPTLY

Envel

Miscella
[13 lea

Copyright, 1924
THOMAS MADDOCK'S SONS COMPANY
Trenton, N. J.

U.
PLUMBING

Vitreous China
Plumbing Fixtures

THOMAS MADDOCK'S SONS COMPANY
TRENTON · NEW JERSEY · U·S·A·

Established 1859
First in the industry - Foremost since

Plant of Thomas Maddock's Sons Company
Largest factory in America devoted exclusively to
the manufacture of vitreous china plumbing fixtures

#22545904
10-22-90

TJ Cat
1924

Thomas Maddock's ...

Sanitary Pottery

Its beginning and development

FROM the very earliest times pottery making has been recognized as one of the fine arts. Recently specimens of pottery have been unearthed in Egypt that recognized authorities have accredited to the period of 4000 years B. C., and in the various great museums throughout the world undoubtedly there are other authentic specimens of Chinese pottery dating from the very earliest times.

The beauty of these examples of art, created during the time that civilization was still in the cradle, has survived during all the ages. The early Greek vase, for instance, with its graceful outline and beautiful decorations still remains the despair of its modern imitators. Egypt, it is true, produced wonderful specimens of pottery before the birth of Christ, but it remained for the Greeks to perfect shapes and decorations. But the latter did little if anything to improve the quality of the ware.

It is to the Chinese that we are indebted for that fine quality of porcelain which is the correct name for china. In the annals of that great traveler, Marco Polo, (A. D. 1254-1324) we read of the rare beauty of the specimens that he brought from China to Pope Gregory X. Later, when Europe opened up trade with China and the mariners of that day brought back samples of early Chinese porcelain, European potters for the first time realized the inferiority of their own product. They were forced to concede the superiority of the Chinese potter whose ware is described in the records of those times as being hard, white, translucent and with a glass-like surface.

The first we learn of porcelain or china being made in Europe was when Johann Bottger (A. D. 1682-1719), a German chemist, accidentally discovered a bed of kaolin. England, where they had

been making pottery for centuries, soon learned the art of making china which was brought to such a high state of perfection by that most famous of all modern potters, Josiah Wedgewood (A. D. 1730-1795). And it is in England where we first find the potter entering the field of the sanitary engineer. The firms of Dolton's and Twyford's, both of which are still in business after several generations, were the first to make sanitary appliances.

As the demand for these very necessary appliances increased throughout England, there was created naturally a market for these fixtures in this country. This market was supplied by the English manufacturers who exported their product to the United States and enjoyed a very good trade for many years.

It was only a short time until American manufacturers were able to improve upon the quality of the English sanitary porcelain ware. Then American inventive genius gradually made improvements in the mechanical operation of the fixtures, until today the sanitary appliances of American manufacturers are recognized as the standard of the world in quality, design and operation.

In the creation and development of the sanitary pottery industry in this country, the firm of Thomas Maddock's Sons Company has played a most important part. Pottery ware of various kinds had been made in the United States for many years, but it was not until 1873 that the American potter attempted to make sanitary ware. Thomas Maddock, founder of Thomas Maddock's Sons Company, was the first to do so and he had the foresight to realize the possibilities of this branch of the pottery industry.

While the early requirements of the trade were only for round basins, French closet bowls and short round hoppers, nevertheless the mechanical difficulties encountered in the production of even such simple pieces would have discouraged any manufacturer who lacked the vision and determination of Thomas Maddock. Then again, in the beginning, great difficulty was experienced in inducing American dealers to accept the domestic ware. The demand was all for the imported product. But this condition lasted for only a comparatively short time because the quality of the home product soon rivaled and then surpassed the foreign wares.

Thomas Maddock's Sons Company was the first to manufacture sanitary ware of a vitreous china body, which was so marked an improvement over the soft porous body originally used.

Through constant development the water closet, which was first made in this country by Thomas Maddock, has resulted in the non-soiling, silent acting, syphon jet of today.

The first vitreous china lavatory was made by Thomas Maddock's Sons Company about 1895. However, it was not until some years later that lavatories were recognized as an important factor in the pottery industry.

The low pattern vitreous china tank, which has practically eliminated the wooden tank, was first produced by this company.

Few people appreciate the importance of these various sanitary plumbing fixtures and the very necessary part they play in our every-day life. Without them it would be impossible for people to live in crowded communities. In large cities disease would run rampant and the plagues of the middle ages would, in all likelihood, be repeated.

The modern bathroom has contributed more than any other one thing to make this a healthful nation and the potter has had a most important responsibility in this development.

It has been said that no nation can progress without sanitary appliances, and that sanitation and civilization go hand in hand. In any event, the lowest type of humanity is to be found where the smallest number of plumbing fixtures are used, and conversely, the highest type of civilization is to be found where the greatest number are in use.

Pottery of Thomas Maddock's Sons Company in 1859

THOS. MADDOCK'S SONS CO.
TRENTON, N.J.

THOMAS MADDOCK

Vitreous China LAVATORIES

Always sanitary and easy to clean

The Vitreous China Lavatory

A FULL appreciation of the advantages offered by Madbury Vitreous China Lavatories may best be gained by considering the progress of lavatory construction generally during the last half century.

The type of lavatory that was in the most general use during the latter part of the nineteenth century was the marble slab and earthenware bowl. A serious objection to this lavatory was that the joint between the slab and bowl was a dirt catcher and a breeding place for disease germs. While this was the most serious objection, it was by no means the only one. It was found that the marble slab stained easily, that it soon lost its lustre and that it was extremely hard to keep clean.

As far back as 1883 Thomas Maddock's Sons Company issued a catalog showing the construction of the bowl and slab in one piece, but, as the use of vitreous china for bathroom fixtures was then unknown, this lavatory was made of common earthenware.

The common earthenware lavatory is most unsatisfactory. Because its body is soft and porous, the glazed surface is subject to crazing and cracking. Furthermore, it is so light and fragile that it is easily broken in handling and in ordinary use. The foreign sanitary manufacturers still use the common earthenware body and have made practically no attempt to produce vitreous china.

Lavatories made of fire clay have been used for a number of years but the sale of this type has diminished, until today it is not a factor in the market. These lavatories are made of a coarse grained body similar to a fire brick and are covered with an enamel. The body is open and porous so that it will absorb moisture and because of the difference in the character of the body and glaze, the surface is subject to crazing.

Cast iron enameled lavatories came into general use as the defects in the two-piece marble slab lavatories became so apparent. Because of the lower price at which the enameled iron fixture is sold it

has been used in large volume. However, it is fast being displaced by the vitreous china lavatory because of the merits of a vitreous china body over cast iron. The vitreous china lavatory is more popular because it can easily be kept clean and will not lose its glossy surface in use. It is not affected by acids and its surface cannot peel off.

The use of vitreous china for bathroom fixtures was developed by Thomas Maddock's Sons Company. Vitreous china is a clay material that is fired to a high degree of heat and becomes extremely hard. After the first firing, the hard vitrified body is covered with a glaze and the piece is again fired. The important thing to remember about vitreous china is that this firing is done at such a high temperature that the piece reaches a molten stage and the hard body and glaze become one homogeneous mass. Vitreous china is guaranteed not to craze, crack or discolor under the most severe usage. Acids cannot injure it. The surface is in reality a part of the body and the body itself is hard, non-porous and impervious to moisture —VITRIFIED, as the name implies.

Blows such as would be received from the falling of cups, tumblers and bottles, sometimes break lavatories made of common earthenware and frequently loosen the enamel on other types so that the surface chips or peels off. This cannot happen to vitreous china lavatories because the body and glaze, being one solid mass, cannot be separated.

The first lavatory ever constructed of vitreous china was made by Thomas Maddock's Sons Company about 1895.

The vitreous china lavatories that are made today by this company represent the highest development yet attained in the production of these sanitary fixtures. They are strong and sturdy and cannot be broken by any blow that they would receive even in unusually hard use. They are absolutely sanitary and easy to keep clean. They have certain built-in refinements that are to be found exclusively in lavatories of Thomas Maddock production.

For example, in the Madbury lavatories shown in this catalog there is no exposed metal work above the slab. All-china handles and escutcheons are used on the supply valves and a china knob and escutcheon on the pop-up waste. Danger of breaking the china

handles in ordinary use has been eliminated by the adoption of the new webbed type Titan handle described on page 227.

The construction of the integral supply feature in the Madbury lavatory is such that the thorough mixing of hot and cold water is assured before the water reaches the nozzle.

The stream of water is directed toward the centre of the bowl in exactly the right place to wash the hands in running water or to fill a drinking glass conveniently.

The bowl is square and unusually large, allowing more washing space than any other lavatory.

Another feature that is exclusive to Madbury lavatories is the Maddock Overflow Cleansing Device. Recognizing the fact that the overflow channel in ordinary lavatories is a lodging place for filth and disease germs, we perfected this innovation. Its simplicity of operation is indicated by the accompanying illustration. In order to thoroughly cleanse the overflow channel it is only necessary to place a finger over the supply nozzle and turn on the supply valves. The water which ordinarily would run through the nozzle is forced back under pressure and down into the overflow in such a manner that the walls of the overflow are thoroughly flushed and cleansed.

The most recent development in lavatory construction is the integral all-china ice water supply attachment—an exclusive Maddock feature. This is shown on pages 12, 26 and 44. The demand for running ice water in rooms of hotels, apartment houses and various institutions is increasing rapidly. This attachment ideally fills this demand and overcomes the many objections to the separate ice water fixture. In it all metal parts are concealed and working parts can be removed from the top without disconnecting the fixture. The nozzle is entirely above the slab so that it is always clean and a drinking glass can readily be filled.

Vitreous china lavatories are made entirely by hand and, therefore, do not have the harsh lines of those made by mechanical processes. Furthermore, in firing a vitreous china piece to the extreme heat that is necessary to make it non-absorbent, stainproof and practically unbreakable it becomes molten and often loses its straight lines. Therefore, vitreous china lavatories have a

certain distinctive irregularity of line—the kind of irregularity that distinguishes the hand-wrought silver creation from one that is manufactured by machinery.

It is naturally expected that the original cost of Madbury lavatories will be higher than the cost of ordinary fixtures. The real fact is that the difference is very little and, when it is remembered that it costs just as much in labor, piping, metal trimmings, etc., to install an inferior lavatory, it will be seen that the difference in the cost of the two types INSTALLED is negligible. Furthermore, the thing to consider is not first cost but final cost, and the ultimate cost of Madbury lavatories will actually be very much lower than that of the ordinary fixture because the Madbury will be giving satisfactory service long after the cheaper lavatory has worn out and has been replaced.

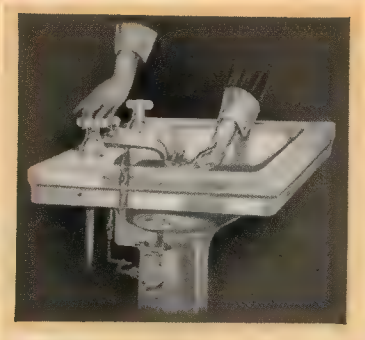

Maddock Overflow Cleansing Device

Chrome and Slated Rod + Knob for Waste for K-2000
Mr. Fristoe advises that unable to furnish at that
may be possible to secure from [illegible]

Do not have in stock a
fitg for old K2000
Per Fristoe - He
further states that
this may be secured
from Speakman Co.
3/31/49
Or Decco Mfg Co,
Boston, Mass. which
have been taken over
by the Mc Intyre Brass
Works, 221 High Street
Boston, 10, Mass.
4/10/51

MADBURY K-2000

White Vitreous China Straight Front Integral Supply Nozzle Lavatory and Pedestal

SPECIFICATION:

White Vitreous China Straight Front Lavatory; Size (see below), with Integral Supply Nozzle, Cleansing Overflow Feature, Square Bowl 6½ inches deep, Hooded Overflow, Anti-splash Rim, Plain Square Pedestal and N. P. Brass Wall Brackets. Fitted with Compression Supply Valves with All-china Cross-arm Handles and Escutcheons, Pop-up Waste with All-china Knob and Escutcheon, 1¼- or 1½-inch N. P. Brass "P" Trap to wall with China Escutcheon and ⅜-inch N. P. Brass Supply Pipes to wall with China Handle Stop Valves and China Wall Escutcheons.

DIMENSIONS:

Lavatory, inches	20x24	22x27	24x30
Approximate weight, packed complete, pounds	190	205	230

NOTE: As this Lavatory is made with an Integral Supply Nozzle, it is sold only with the fittings as shown, with or without Trap and Supply Pipes.

THOMAS MADDOCK'S SONS COMPANY

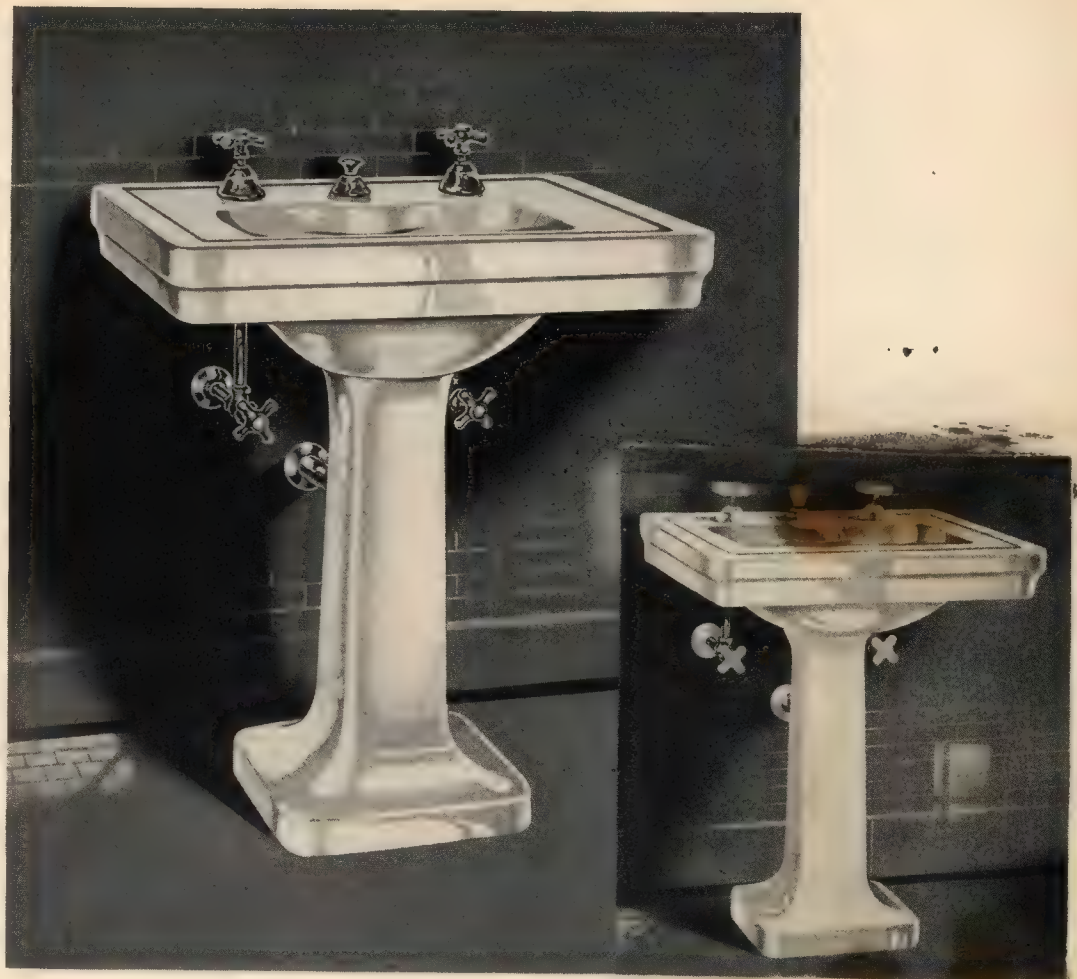

MADBURY K-2000 C

MADE OF

DUROCK

MADBURY K-2000E

White Vitreous China Straight Front Integral Supply Nozzle Lavatory with Pedestal and Chromium Trimmings

SPECIFICATION:

White Vitreous China Straight Front Lavatory; Size (see below), with Integral Supply Nozzle, Cleansing Overflow Feature, Square Bowl 6½ inches deep, Hooded Overflow, Anti-splash Rim, Plain Square Pedestal and Chromium Brass Wall Brackets. Fitted with Compression Supply Valves with Chromium Cross-arm Handles and Escutcheons, Pop-up Waste with Chromium Knob and Escutcheon, 1¼- or 1½-inch Chromium Brass "P" Trap to wall with Chromium Escutcheon and ⅜-inch Chromium Brass Supply Pipes to wall with Chromium Handle Stop Valves and Chromium Wall Escutcheons.

DIMENSIONS:

Lavatory, inches	20x24	22x27	24x30
Approximate weight, packed complete, pounds	190	205	230

NOTE: As this Lavatory is made with an Integral Supply Nozzle, it is sold only with the fittings as shown, with or without Trap and Supply Pipes.

(For roughing measurements, see reverse side)

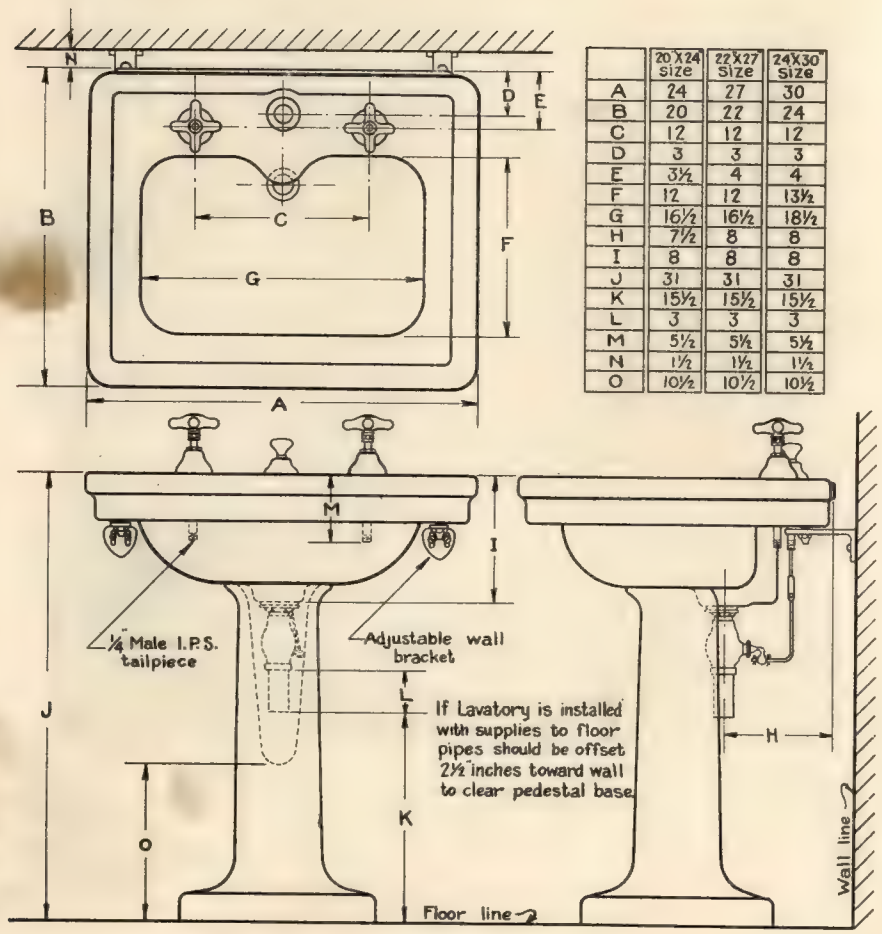

	20"X24" Size	22"X27" Size	24"X30" Size
A	24	27	30
B	20	22	24
C	12	12	12
D	3	3	3
E	3½	4	4
F	12	12	13½
G	16½	16½	18½
H	7½	8	8
I	8	8	8
J	31	31	31
K	15½	15½	15½
L	3	3	3
M	5½	5½	5½
N	1½	1½	1½
O	10½	10½	10½

K-2000 C Roughing Measurements

Measurements may vary from ¼ to ½ inch

THOMAS MADDOCK'S SONS COMPANY

MADBURY K-2000 W

MADE OF

DUROCK

White Vitreous China Straight Front Integral
Supply Nozzle Lavoratory Built-in Supply Valves and Pedestal

SPECIFICATION:

White Vitreous China Straight Front Lavatory; Size (see below), with Integral Supply Nozzle, Cleansing Overflow Feature, Square Bowl 6½ inches deep, Hooded Overflow, Anti-splash Rim, Plain Square Pedestal and N. P. Brass Wall Brackets. Fitted with Built-in Compression Supply Valves with China Cross-arm Handles and Escutcheons, Pop-up Waste with All-china Knob and Escutcheon, 1¼- or 1½-inch N. P. Brass "P" Trap to wall with China Escutcheon and ⅜-inch N. P. Brass Supply Pipe to Lavatory with China Escutcheon.

DIMENSIONS:

Lavatory, inches	20x24	22x27	24x30
Approximate weight, packed complete, pounds	162	180	215

(For roughing measurements, see reverse side)

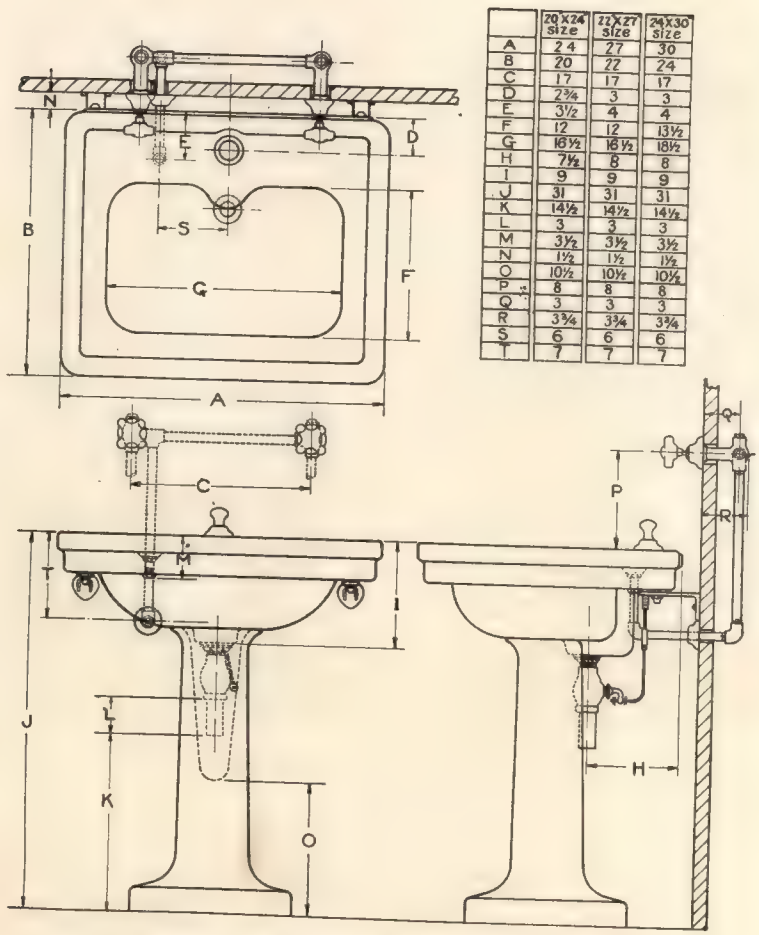

	20 X 24 size	22 X 27 size	24 X 30 size
A	24	27	30
B	20	22	24
C	17	17	17
D	2¾	3	3
E	3½	4	4
F	12	12	13½
G	16½	16½	18½
H	7½	8	8
I	9	9	9
J	31	31	31
K	14½	14½	14½
L	3	3	3
M	3½	3½	3½
N	1½	1½	1½
O	10½	10½	10½
P	8	8	8
Q	3	3	3
R	3¾	3¾	3¾
S	6	6	6
T	7	7	7

K-2000 W Roughing Measurements

Measurements may vary from ¼ to ½ inch

MADBURY K-2001

MADBURY K-2001A

MADBURY K-2001C

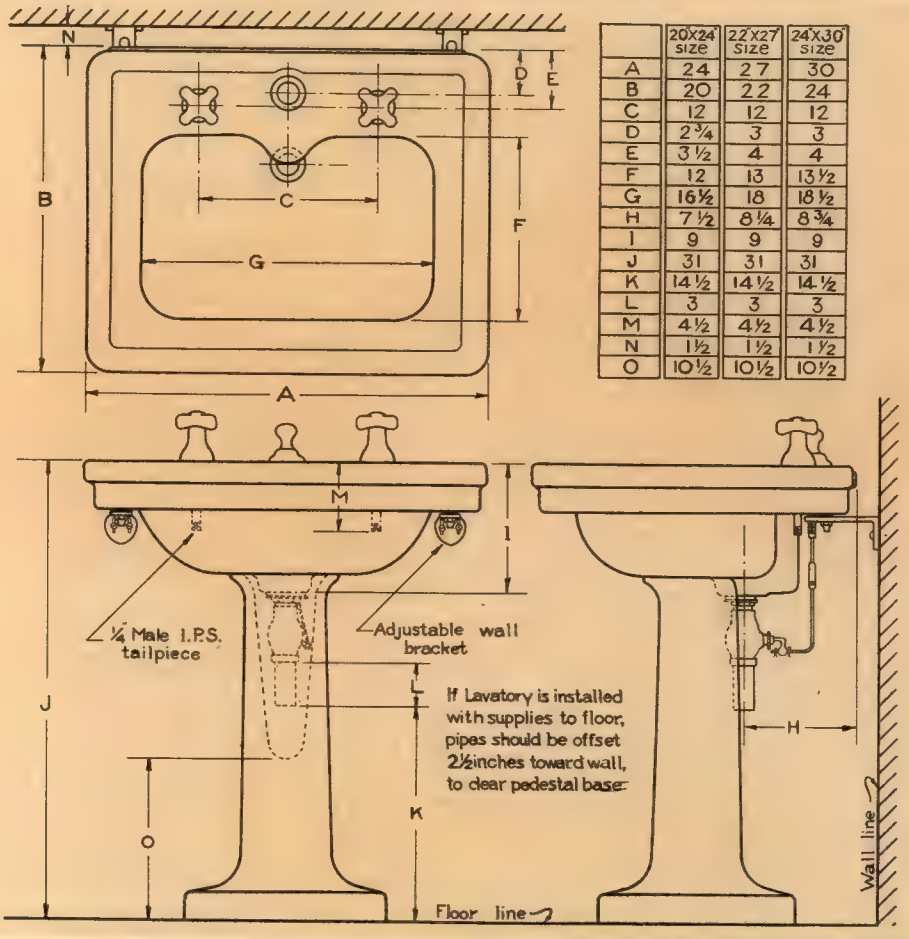

	20X24 size	22X27 Size	24X30 size
A	24	27	30
B	20	22	24
C	12	12	12
D	2¾	3	3
E	3½	4	4
F	12	13	13½
G	16½	18	18½
H	7½	8¼	8¾
I	9	9	9
J	31	31	31
K	14½	14½	14½
L	3	3	3
M	4½	4½	4½
N	1½	1½	1½
O	10½	10½	10½

K-2000 Roughing Measurements

Measurements may vary from ¼ to ½ inch

Features of the Madbury Lavatory

Integral Supply Nozzle
Cleansing Overflow Feature
Large Square Bowl
Hooded Overflow
Anti-splash Rim
Titan Webbed Handles

All metal parts above the slab are completely covered with china

MADBURY K-2002

White Vitreous China Straight Front Integral Supply Nozzle Lavatory with China Ice Water Attachment and Pedestal

SPECIFICATION:

White Vitreous China Straight Front Lavatory; Size (see below), with Integral Supply Nozzle, Cleansing Overflow Feature, Integral China Ice Water Attachment, Square Bowl 6½ inches deep, Hooded Overflow, Anti-splash Rim, Plain Square Pedestal and N. P. Brass Wall Brackets. Fitted with Compression Supply Valves with All-china Cross-arm Handles and Escutcheons, All-china Self-closing Push Button Ice Water Attachment, Pop-up Waste with All-china Knob and Escutcheon, 1¼- or 1½-inch N. P. Brass "P" Trap to wall with China Escutcheon and ⅜-inch N. P. Brass Supply Pipes to wall with China Handle Stop Valves and China Wall Escutcheons.

DIMENSIONS:

Lavatory, inches	20x24	22x27	24x30
Approximate weight, packed complete, pounds	193	208	233

NOTE: As this Lavatory is made with an Integral Supply Nozzle, it is sold only with the fittings as shown, with or without Trap and Supply Pipes.

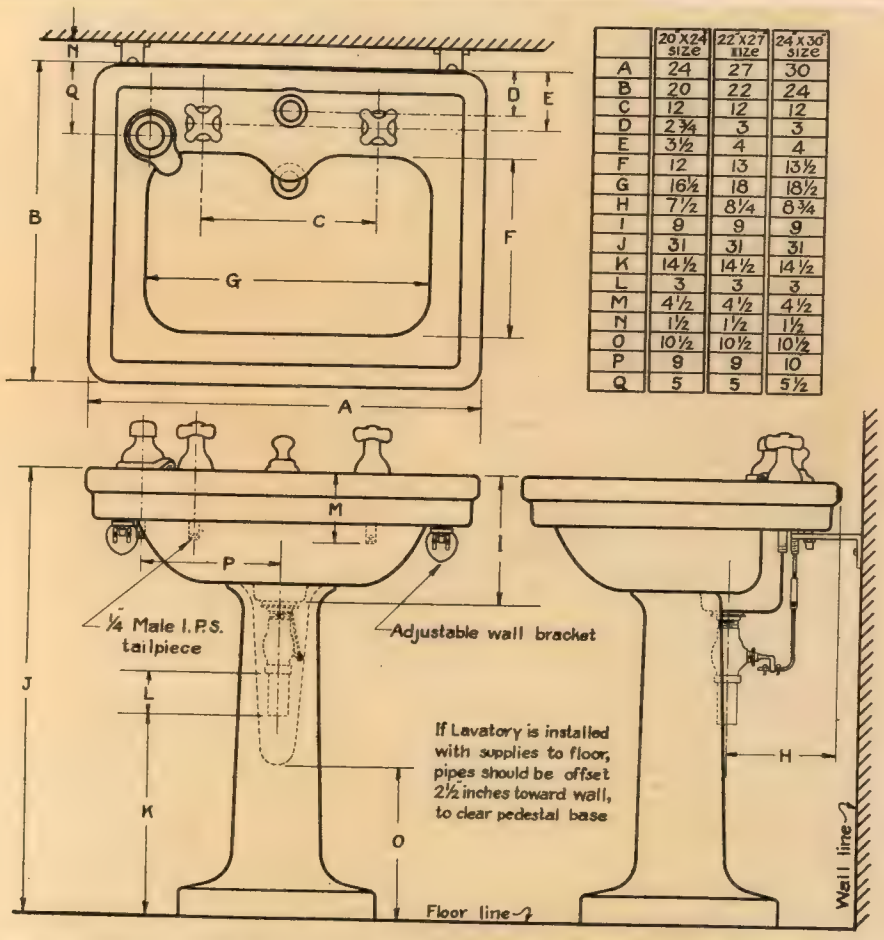

	20"X24" size	22"X27" size	24"X30" size
A	24	27	30
B	20	22	24
C	12	12	12
D	2¾	3	3
E	3½	4	4
F	12	13	13½
G	16½	18	18½
H	7½	8¼	8¾
I	9	9	9
J	31	31	31
K	14½	14½	14½
L	3	3	3
M	4½	4½	4½
N	1½	1½	1½
O	10½	10½	10½
P	9	9	10
Q	5	5	5½

K-2002 Roughing Measurements

Measurements may vary from ¼ to ½ inch

In addition to the many Madbury features, this lavatory has an integral china ice water attachment with all metal parts concealed. All working parts can be removed from the top without disconnecting the fixture. The nozzle is entirely above the top of the slab so that it is always clean and a glass can be filled easily. This makes a clean, sanitary attachment and overcomes the many objections to the separate ice water fixture.

MADRID K-2003

White Vitreous China Straight Front Lavatory and Pedestal

SPECIFICATION:

White Vitreous China Straight Front Lavatory; Size (see below), with Bowl 6½ inches deep, Hooded Overflow, Anti-splash Rim, Plain Square Pedestal and N. P. Brass Wall Brackets. Fitted with N. P. Brass Combination Supply and Pop-up Waste Fixture with China Knob, Compression Supply Valves with China Cross-arm Handles and Escutcheons, 1¼-inch N. P. Brass "P" Trap to wall with China Escutcheon and ⅜-inch N. P. Brass Supply Pipes to wall with China Handle Stop Valves and China Wall Escutcheons.

DIMENSIONS:

Lavatory, inches	20x24	22x27	24x30
Approximate weight, packed, Lavatory and Pedestal, pounds	175	195	215

MADGLEN K-2010

MADKING K-2050

MADKING K-2050A

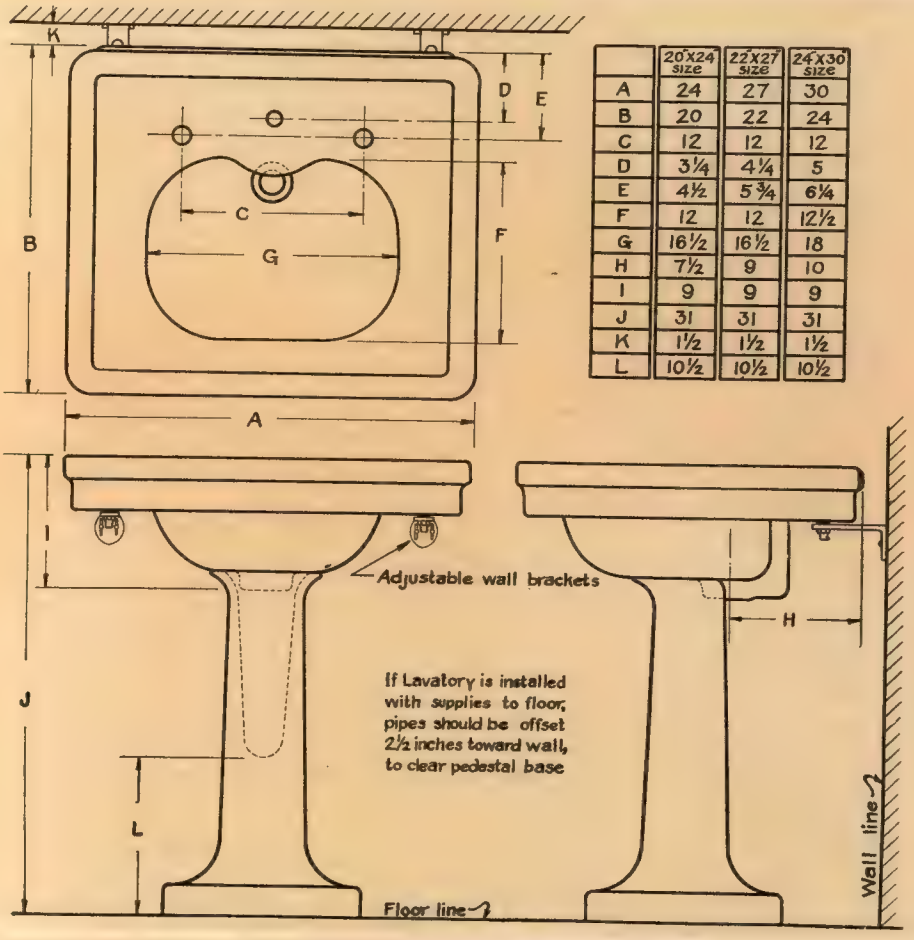

	20"X24" SIZE	22"X27" SIZE	24"X30" SIZE
A	24	27	30
B	20	22	24
C	12	12	12
D	3¼	4¼	5
E	4½	5¾	6¼
F	12	12	12½
G	16½	16½	18
H	7½	9	10
I	9	9	9
J	31	31	31
K	1½	1½	1½
L	10½	10½	10½

K-2003 Roughing Measurements

Measurements may vary from ¼ to ½ inch

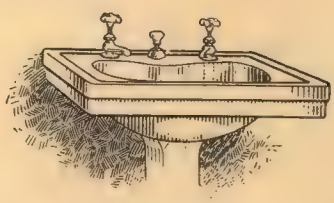

K-2003 A

Same as K-2003 except with two faucets and pop-up waste

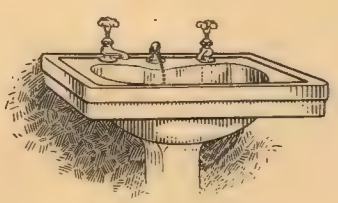

K-2003 B

Same as K-2003 except with two faucets and plug, chain and chainstay

Fitting substitutions pages 72 and 73

THOS. MADDOCK'S SONS CO. TRENTON, N.J.

MADRID K-2100

White Vitreous China Straight Front Lavatory and Legs

SPECIFICATION:

White Vitreous China Straight Front Lavatory; Size (see below), with Bowl 6½ inches deep, Hooded Overflow, Anti-splash Rim, two Vitreous China Legs with Rods and N. P. Brass Wall Brackets. Fitted with N. P. Brass Combination Supply and Pop-up Waste Fixture with China Knob, Compression Supply Valves with China Cross-arm Handles and Escutcheons, 1¼-inch N. P. Brass "P" Trap to wall with China Escutcheon and ⅜-inch N. P. Brass Supply Pipes to wall with China Handle Stop Valves and China Wall Escutcheons.

DIMENSIONS:

Lavatory, inches	22x27	24x30
Approximate weight, packed, Lavatory and Legs, pounds	170	195

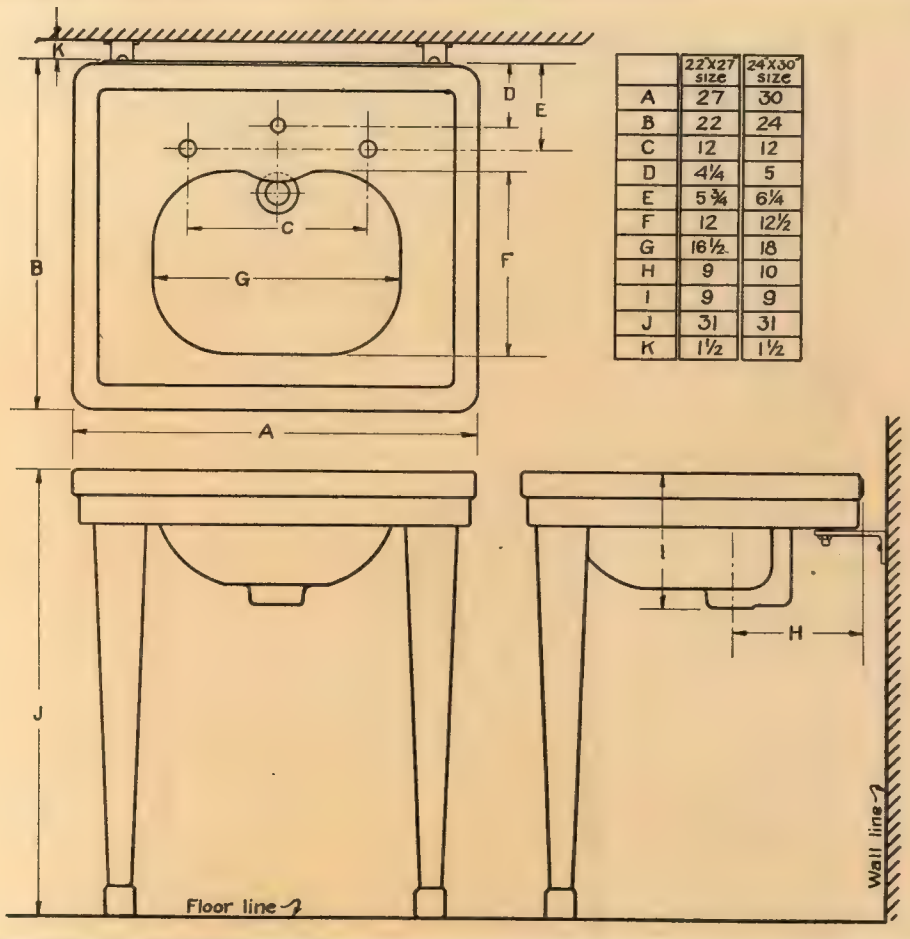

	22"X27" SIZE	24"X30" SIZE
A	27	30
B	22	24
C	12	12
D	4¼	5
E	5¾	6¼
F	12	12½
G	16½	18
H	9	10
I	9	9
J	31	31
K	1½	1½

K-2100 Roughing Measurements

Measurements may vary from ¼ to ½ inch

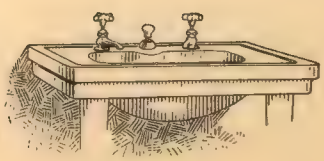

K-2100 A

Same as K-2100 except with two faucets and pop-up waste

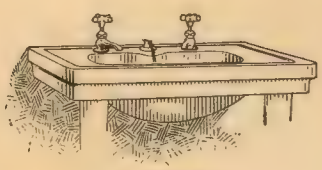

K-2100 B

Same as K-2100 except with two faucets and plug, chain and chainstay

Fitting substitutions pages 72 and 73

THOS. MADDOCKS SONS CO. TRENTON, N.J.

MADBURY K-2101

White Vitreous China Straight Front Integral Supply Nozzle Lavatory and Legs

SPECIFICATION:

White Vitreous China Straight Front Lavatory; Size (see below), with Integral Supply Nozzle, Cleansing Overflow Feature, Square Bowl 6½ inches deep, Hooded Overflow, Anti-splash Rim, two Vitreous China Legs with Rods and N. P. Brass Wall Brackets. Fitted with Compression Supply Valves with All-china Cross-arm Handles and Escutcheons, Pop-up Waste with All-china Knob and Escutcheon, 1¼- or 1½-inch N. P. Brass "P" Trap to wall with China Escutcheon and ⅜-inch N. P. Brass Supply Pipes to wall with China Handle Stop Valves and China Wall Escutcheons.

DIMENSIONS:

Lavatory, inches	22x27	24x30
Approximate weight, packed complete, pounds	190	220

NOTE: As this Lavatory is made with an Integral Supply Nozzle, it is sold only with the fittings as shown, with or without Trap and Supply Pipes.

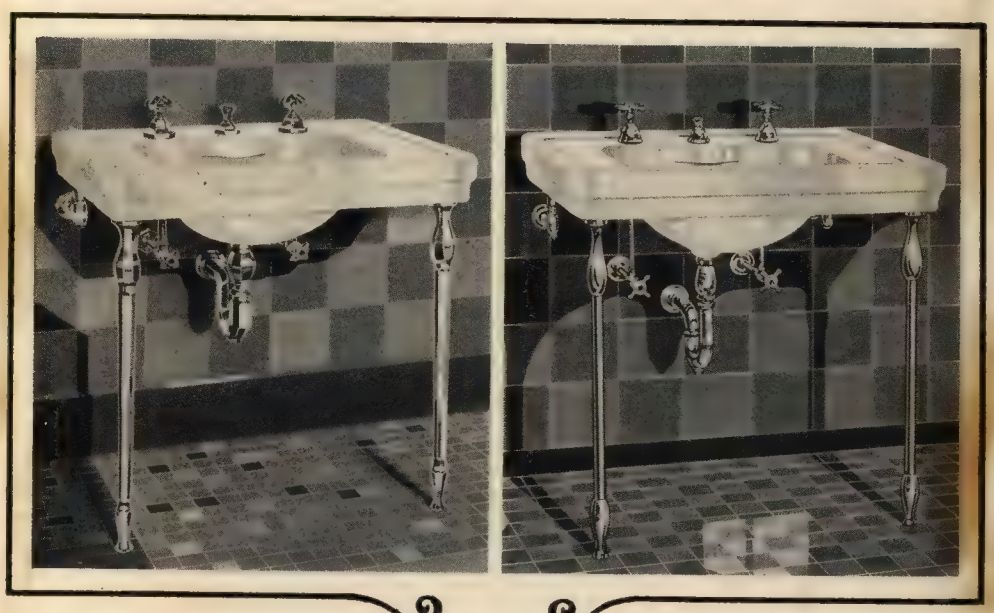

MADBURY K-2103A

MADBURY K-2103C

MADBURY K-2104

MADBURY K-2104A

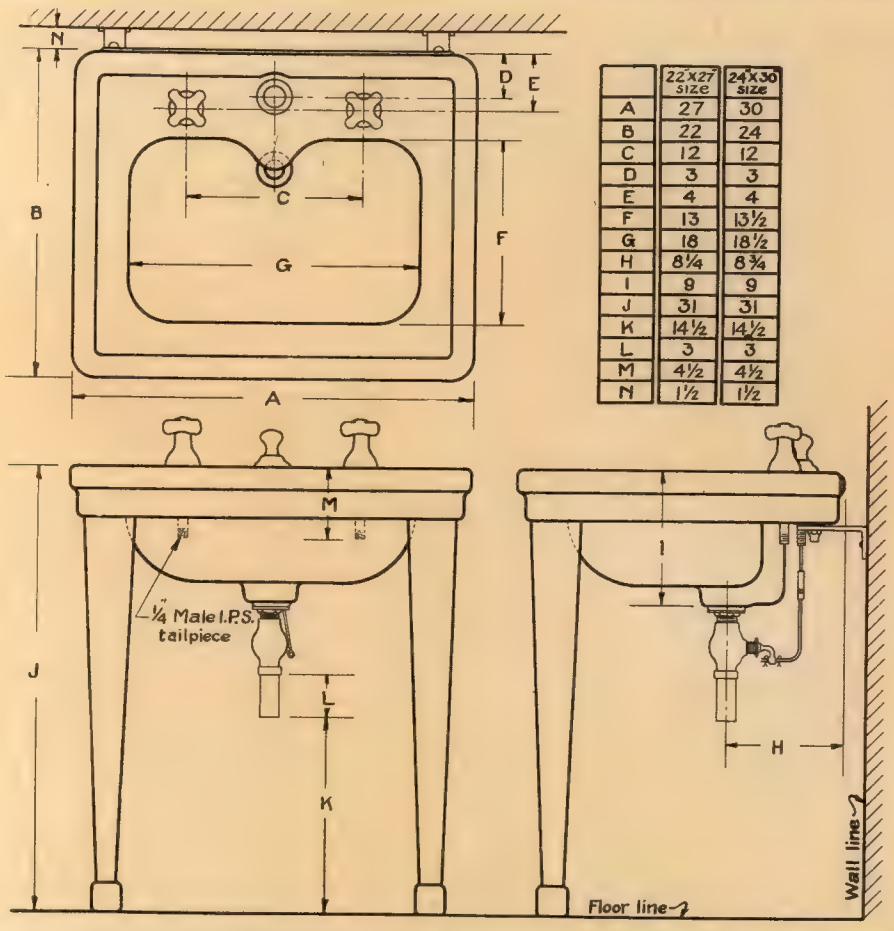

	22"x27" size	24"x30" size
A	27	30
B	22	24
C	12	12
D	3	3
E	4	4
F	13	13½
G	18	18½
H	8¼	8¾
I	9	9
J	31	31
K	14½	14½
L	3	3
M	4½	4½
N	1½	1½

K-2101 Roughing Measurements

Measurements may vary from ¼ to ½ inch

Features of the Madbury Lavatory

Integral Supply Nozzle
Cleansing Overflow Feature
Large Square Bowl
Hooded Overflow
Anti-splash Rim
Titan Webbed Handles

All metal parts above the slab are completely covered with china

THOS. MADDOCK'S SONS CO. TRENTON, N.J.

MADRID K-2106

White Vitreous China Straight Front
Surgical Lavatory and Legs

SPECIFICATION:

White Vitreous China Straight Front Surgical Lavatory; Size 24x30 inches, with Bowl 6½ inches deep, Hooded Overflow, Anti-splash Rim, two Vitreous China Legs with Rods and N. P. Brass Wall Brackets. Fitted with White Vitreous China Soap Dish, N. P. Brass Knee Action Mixing Valve attached to wall with Lock-shield Controlling Valves and ½-inch I. P. Size Supply Pipes to wall, N. P. Brass Raised Supply Nozzle with Removable Rose Spray, N. P. Brass Waste Plug for continuous flow and 1¼-inch N. P. Brass "P" Trap to wall with China Escutcheon.

DIMENSIONS:

Lavatory, inches	24x30
Approximate weight, packed, Lavatory and Legs, pounds	195

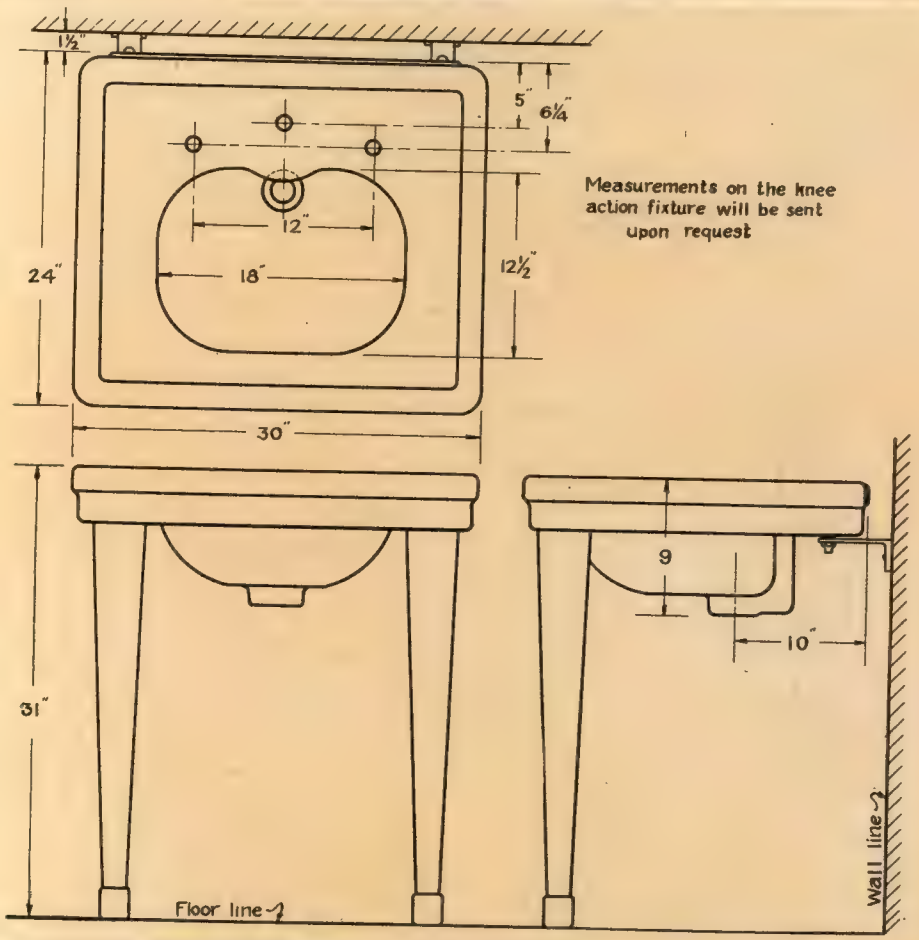

K-2106 Roughing Measurements

Measurements may vary from ¼ to ½ inch

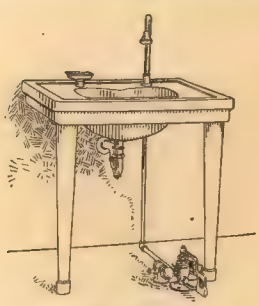

K-2106 A

This lavatory is the same as K-2106 except with foot action supply valves.

MADRID K-2200

White Vitreous China Straight Front Lavatory and Leg

SPECIFICATION:

White Vitreous China Straight Front Lavatory; Size (see below), with Bowl 6½ inches deep, Hooded Overflow, Anti-splash Rim, Vitreous China Leg with Rod and N. P. Brass Wall Brackets. Fitted with N. P. Brass Compression Faucets with China Cross-arm Handles, Pop-up Waste with China Knob and Escutcheon, 1¼-inch N. P. Brass "P" Trap to wall with China Escutcheon and ⅜-inch N. P. Brass Supply Pipes to wall with Loose Key Stop Valves and China Wall Escutcheons.

DIMENSIONS:

Lavatory, inches	18x20	20x24
Approximate weight, packed, Lavatory and Leg, pounds	110	135

MADRID K-2200

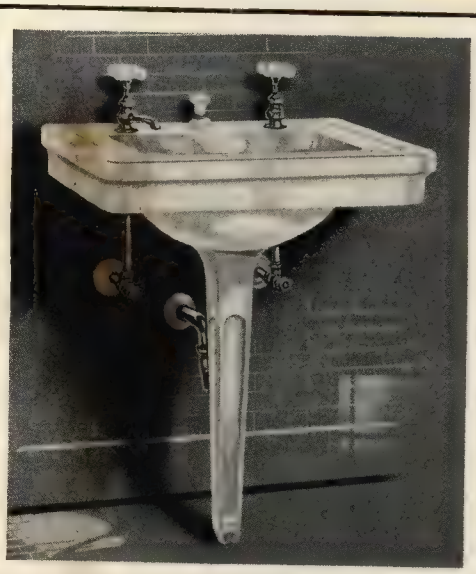

MADRID K-2200A

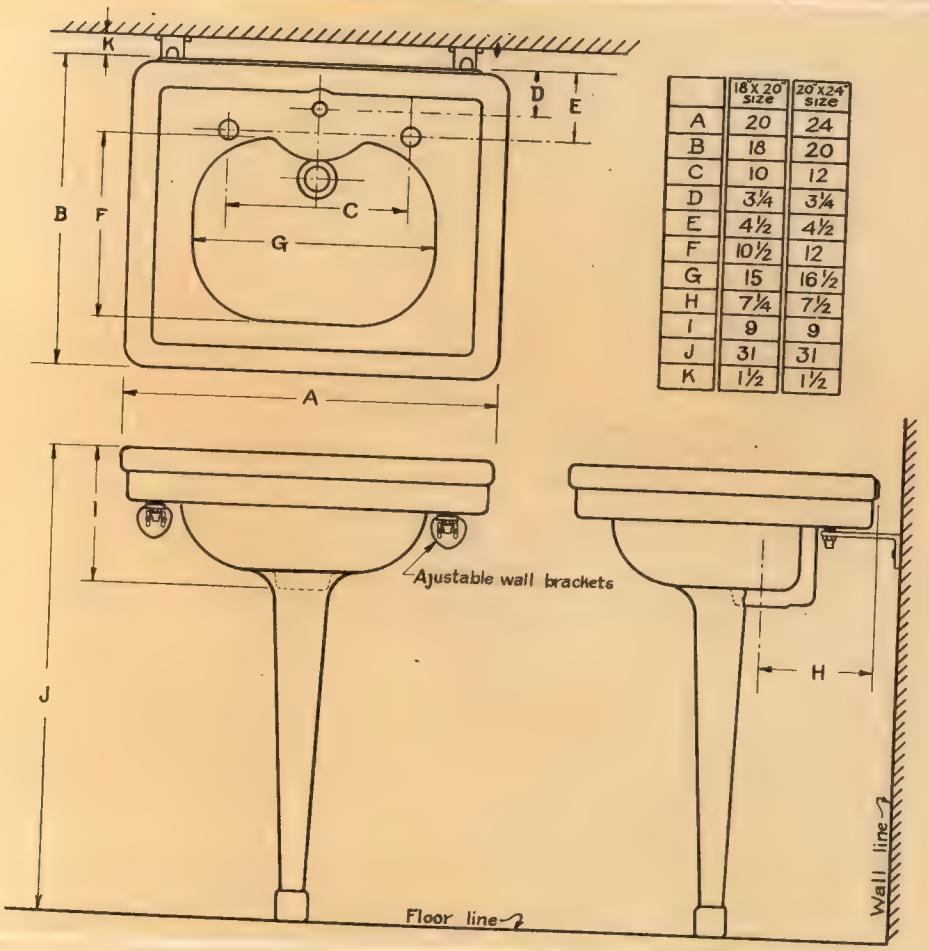

	18"X 20" SIZE	20"X24" SIZE
A	20	24
B	18	20
C	10	12
D	3¼	3¼
E	4½	4½
F	10½	12
G	15	16½
H	7¼	7½
I	9	9
J	31	31
K	1½	1½

K-2200 Roughing Measurements

Measurements may vary from ¼ to ½ inch

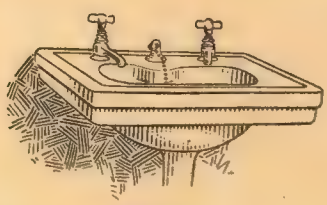

K-2200 B

Same as K-2200 except with plug, chain and chainstay

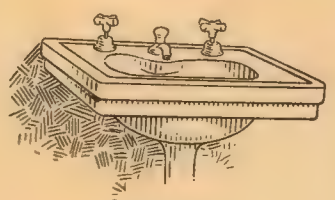

K-2200 C

Same as K-2200 except with combination supply and pop-up waste fixture

Fitting substitutions pages 72 and 73

MADBURY K-2201

White Vitreous China Straight Front Integral Supply Nozzle Lavatory and Leg

SPECIFICATION:

White Vitreous China Straight Front Lavatory; Size (see below), with Integral Supply Nozzle, Cleansing Overflow Feature, Square Bowl 6½ inches deep, Hooded Overflow, Anti-splash Rim, Vitreous China Leg with Rod and N. P. Brass Wall Brackets. Fitted with Compression Supply Valves with All-china Cross-arm Handles and Escutcheons, Pop-up Waste with All-china Knob and Escutcheon, 1¼- or 1½-inch N. P. Brass "P" Trap to wall with China Escutcheon and ⅜-inch N. P. Brass Supply Pipes to wall with Loose Key Stop Valves and China Wall Escutcheons.

DIMENSIONS:

Lavatory, inches	18x20	20x24
Approximate weight, packed complete, pounds	130	153

NOTE: As this Lavatory is made with an Integral Supply Nozzle, it is sold only with the fittings as shown, with or without Trap and Supply Pipes.

MADBURY K-2201A

Same as K-2201 except with Madline china trimmings

MADBURY K-2201

MADBURY K-2201C

MADBURY K-2201E

THOMAS MADDOCK'S SONS COMPANY

MADBURY K-2201 W

MADE OF

DUROCK

White Vitreous China Straight Front Integral Supply Nozzle Lavatory, Built-in Supply Valves and Leg

SPECIFICATION:

White Vitreous China Straight Front Lavatory; Size (see below), with Integral Supply Nozzle, Cleansing Overflow Feature, Square Bowl 6½-inches deep, Hooded Overflow, Anti-splash Rim, Vitreous China Leg with Rod and N. P. Brass Wall Brackets. Fitted with Built-in Compression Supply Valves with China Cross-arm Handles and Escutcheons, Pop-up Waste with All-china Knob and Escutcheon, 1¼- or 1½-inch N. P. Brass "P" Trap to wall with China Escutcheon and ⅜-inch N. P. Brass Supply Pipe to Lavatory with China Escutcheon.

DIMENSIONS:

Lavatory, inches	18x20	20x24
Approximate weight, packed complete, pounds	120	135

(For roughing measurements, see reverse side)

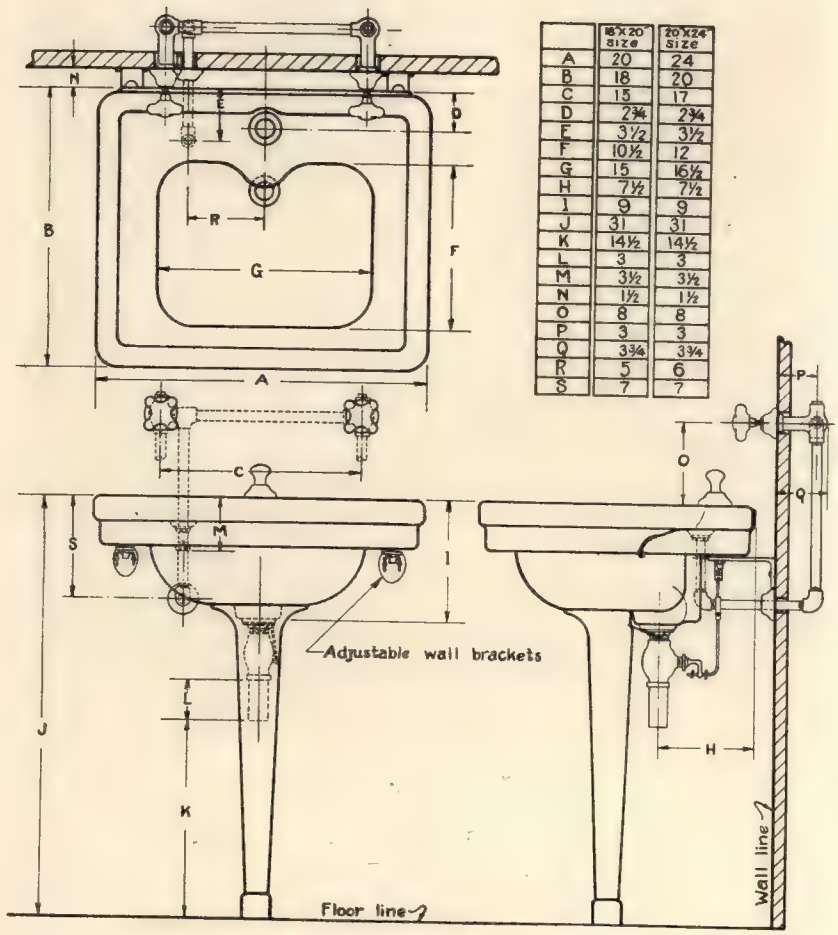

	16"X20" Size	20"X24" Size
A	20	24
B	18	20
C	15	17
D	2¾	2¾
E	3½	3½
F	10½	12
G	15	16½
H	7½	7½
I	9	9
J	31	31
K	14½	14½
L	3	3
M	3½	3½
N	1½	1½
O	8	8
P	3	3
Q	3¾	3¾
R	5	6
S	7	7

K-2201 W Roughing Measurements

Measurements may vary from ¼ to ½ inch

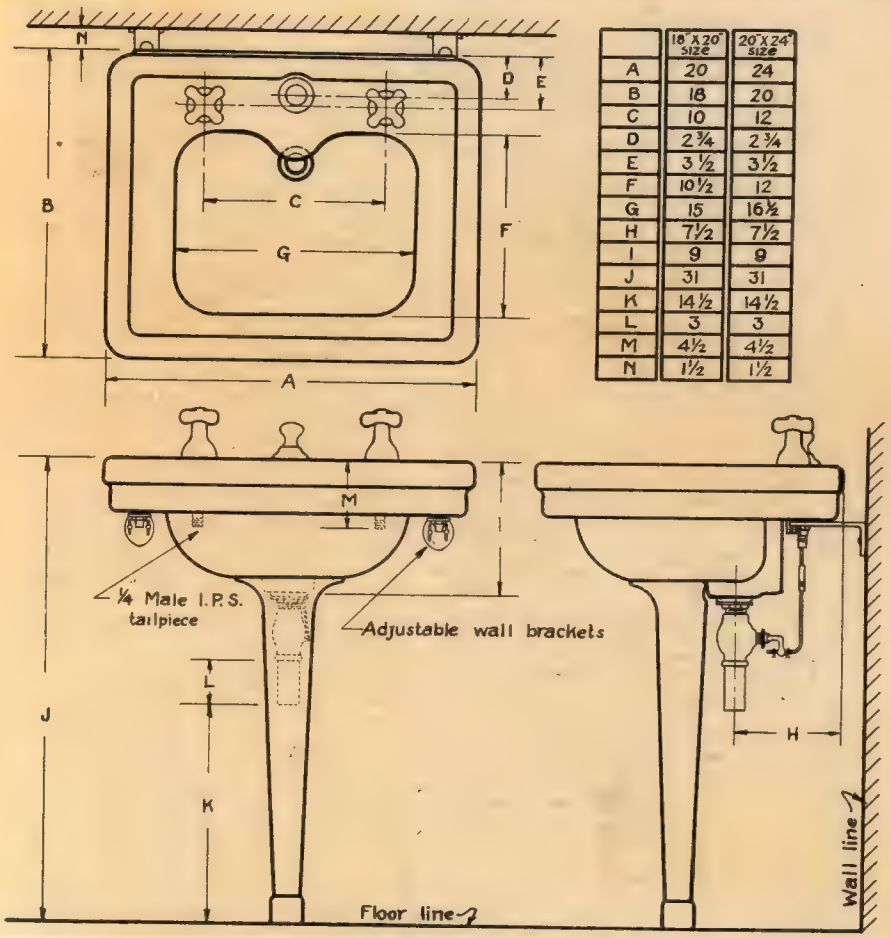

	18" X 20" SIZE	20" X 24" SIZE
A	20	24
B	18	20
C	10	12
D	2¾	2¾
E	3½	3½
F	10½	12
G	15	16½
H	7½	7½
I	9	9
J	31	31
K	14½	14½
L	3	3
M	4½	4½
N	1½	1½

K-2201 Roughing Measurements

Measurements may vary from ¼ to ½ inch

Features of the Madbury Lavatory

Integral Supply Nozzle
Cleansing Overflow Feature
Large Square Bowl
Hooded Overflow
Anti-splash Rim
Titan Webbed Handles

All metal parts above the slab are completely covered with china

THOS. MADDOCK'S SONS CO. TRENTON, N.J.

MADBURY K-2202

White Vitreous China Straight Front Integral Supply Nozzle Lavatory with China Ice Water Attachment and Leg

SPECIFICATION:

White Vitreous China Straight Front Lavatory; Size (see below), with Integral Supply Nozzle, Cleansing Overflow Feature, Integral China Ice Water Attachment, Square Bowl 6½ inches deep, Hooded Overflow, Anti-splash Rim, Vitreous China Leg with Rod and N. P. Brass Wall Brackets. Fitted with Compression Supply Valves with All-china Cross-arm Handles and Escutcheons, All-china Self-closing Push Button Ice Water Attachment, Pop-up Waste with All-china Knob and Escutcheon, 1¼- or 1½-inch N. P. Brass "P" Trap to wall with China Escutcheon and ⅜-inch N. P. Brass Supply Pipes to wall with Loose Key Stop Valves and China Wall Escutcheons.

DIMENSIONS:

Lavatory, inches	18x20	20x24
Approximate weight, packed complete, pounds	133	156

NOTE: As this Lavatory is made with an Integral Supply Nozzle, it is sold only with the fittings as shown, with or without Trap and Supply Pipes.

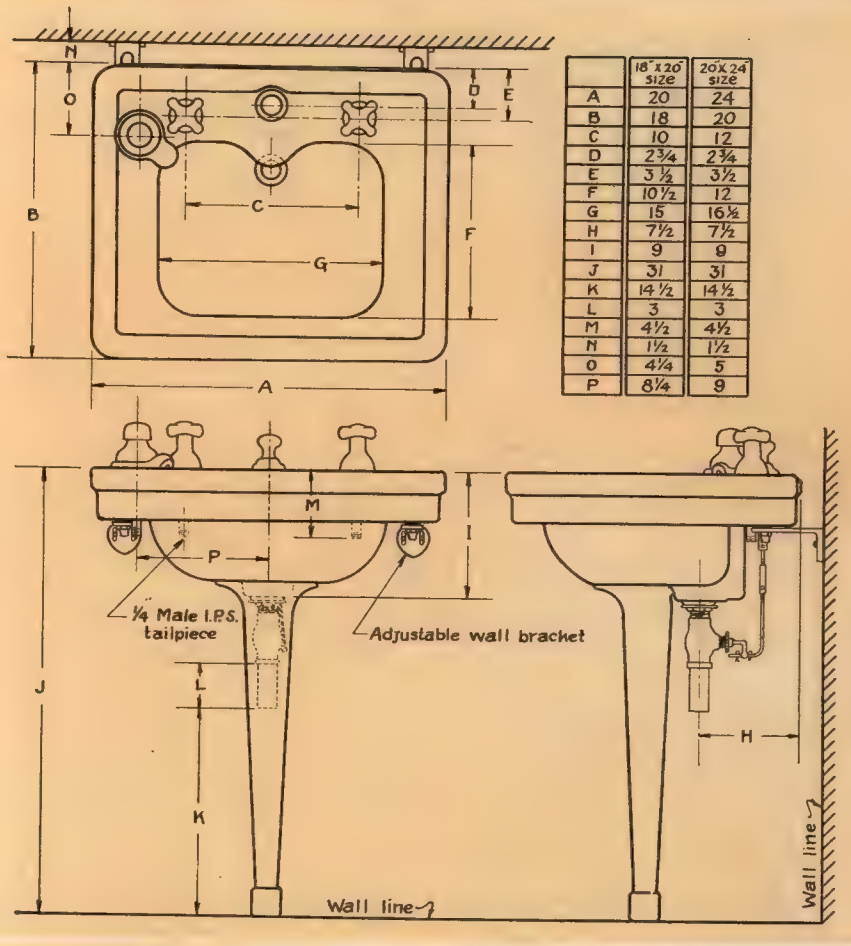

	18"x20" size	20"x24" size
A	20	24
B	18	20
C	10	12
D	2¾	2¾
E	3½	3½
F	10½	12
G	15	16½
H	7½	7½
I	9	9
J	31	31
K	14½	14½
L	3	3
M	4½	4½
N	1½	1½
O	4¼	5
P	8¼	9

K-2202 Roughing Measurements

Measurements may vary from ¼ to ½ inch

In addition to the many Madbury features this lavatory has an integral china ice water attachment with all metal parts concealed. All working parts can be removed from the top without disconnecting the fixture. The nozzle is entirely above the top of the slab so that it is always clean and a glass can easily be filled. This makes a clean, sanitary attachment and overcomes the many objections to the separate ice water fixture.

MADRID K-2203

White Vitreous China Straight Front Lavatory with 6-inch Integral Back and Leg

SPECIFICATION:

White Vitreous China Straight Front Lavatory with 6-inch Integral Back; Size (see below), with Bowl 6½ inches deep, Hooded Overflow, Anti-splash Rim, Vitreous China Leg with Rod and Concealed Hanger. Fitted with N. P. Brass Compression Faucets with China Cross-arm Handles, Pop-up Waste with China Knob and Escutcheon, 1¼-inch N. P. Brass "P" Trap to wall with China Escutcheon and ⅜-inch N. P. Brass Supply Pipes to wall with Loose Key Stop Valves and China Wall Escutcheons.

DIMENSIONS:

Lavatory, inches	18x20	20x24
Approximate weight, packed, Lavatory and Leg, pounds	130	160

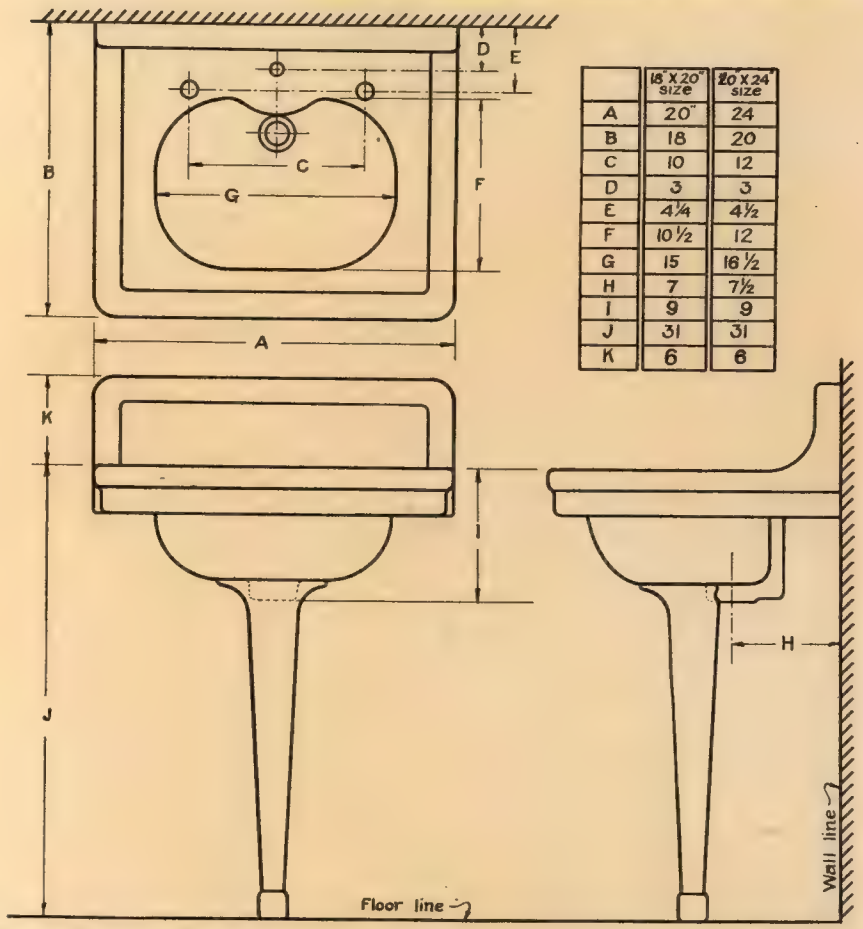

	18" X 20" size	20" X 24" size
A	20"	24
B	18	20
C	10	12
D	3	3
E	4¼	4½
F	10½	12
G	15	16½
H	7	7½
I	9	9
J	31	31
K	6	6

K-2203 Roughing Measurements

Measurements may vary from ¼ to ½ inch

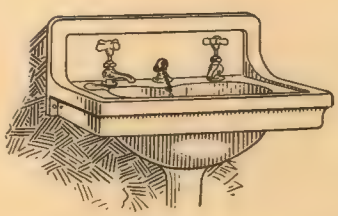

K-2203 B

Same as K-2203 except with plug, chain and chainstay

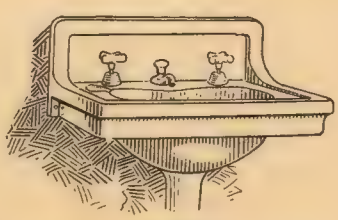

K-2203 C

Same as K-2203 except with combination supply and pop-up waste fixture

Fitting substitutions pages 72 and 73

MADBURY K-2204

White Vitreous China Straight Front Integral Supply Nozzle Lavatory with 6-inch Integral Back and Leg

SPECIFICATION:

White Vitreous China Straight Front Lavatory with 6-inch Integral Back; Size (see below), with Integral Supply Nozzle, Cleansing Overflow Feature, Square Bowl 6½ inches deep, Hooded Overflow, Anti-splash Rim, Vitreous China Leg with Rod and Concealed Hanger. Fitted with Compression Supply Valves with All-china Cross-arm Handles and Escutcheons, Pop-up Waste with All-china Knob and Escutcheon, 1¼- or 1½-inch N. P. Brass "P" Trap to wall with China Escutcheon and ⅜-inch N. P. Brass Supply Pipes to wall with Loose Key Stop Valves and China Wall Escutcheons.

DIMENSIONS:

Lavatory, inches	19x20	21x24
Approximate weight, packed complete, pounds	140	175

NOTE: As this Lavatory is made with an Integral Supply Nozzle, it is sold only with the fittings as shown, with or without Trap and Supply Pipes.

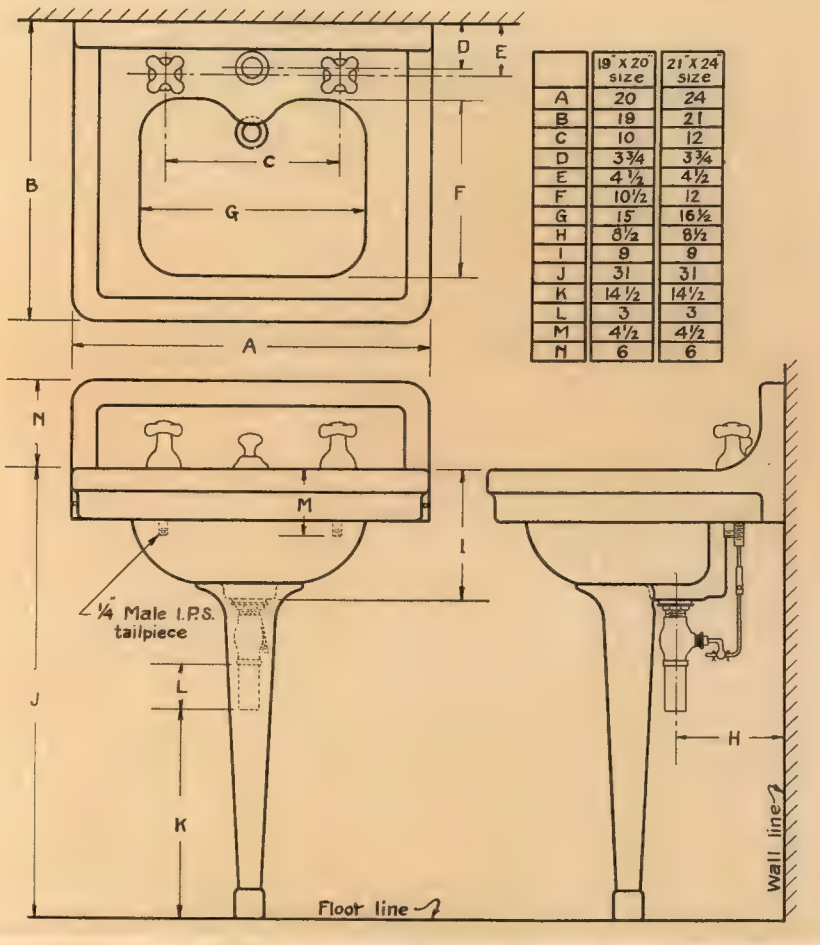

	19" x 20" size	21" x 24" size
A	20	24
B	19	21
C	10	12
D	3¾	3¾
E	4½	4½
F	10½	12
G	15	16½
H	8½	8½
I	9	9
J	31	31
K	14½	14½
L	3	3
M	4½	4½
N	6	6

K-2204 Roughing Measurements

Measurements may vary from ¼ to ½ inch

Features of the Madbury Lavatory

Integral Supply Nozzle
Cleansing Overflow Feature
Large Square Bowl
Hooded Overflow
Anti-splash Rim
Titan Webbed Handles

All metal parts above the slab are completely covered with china

THOS. MADDOCK'S SONS CO. TRENTON, N.J.

MADRID K-2205

White Vitreous China Straight Front
Barber Lavatory and Leg

SPECIFICATION:

White Vitreous China Straight Front Barber Lavatory; Size 20x24 inches, with Bowl 6½ inches deep, Hooded Overflow, Anti-splash Rim, Vitreous China Leg with Rod and N. P. Brass Wall Brackets. Fitted with N. P. Brass Combination Shampoo Fixture with N. P. Brass Compression Faucets with China Indexed Handles, Pop-up Waste with China Knob and Escutcheon, 1¼-inch N. P. Brass "P" Trap to wall with China Escutcheon and ⅜-inch N. P. Brass Supply Pipes to wall with China Handle Stop Valves and China Wall Escutcheons.

DIMENSIONS:

Lavatory, inches	20x24
Approximate weight, packed, Lavatory and Leg, pounds	135

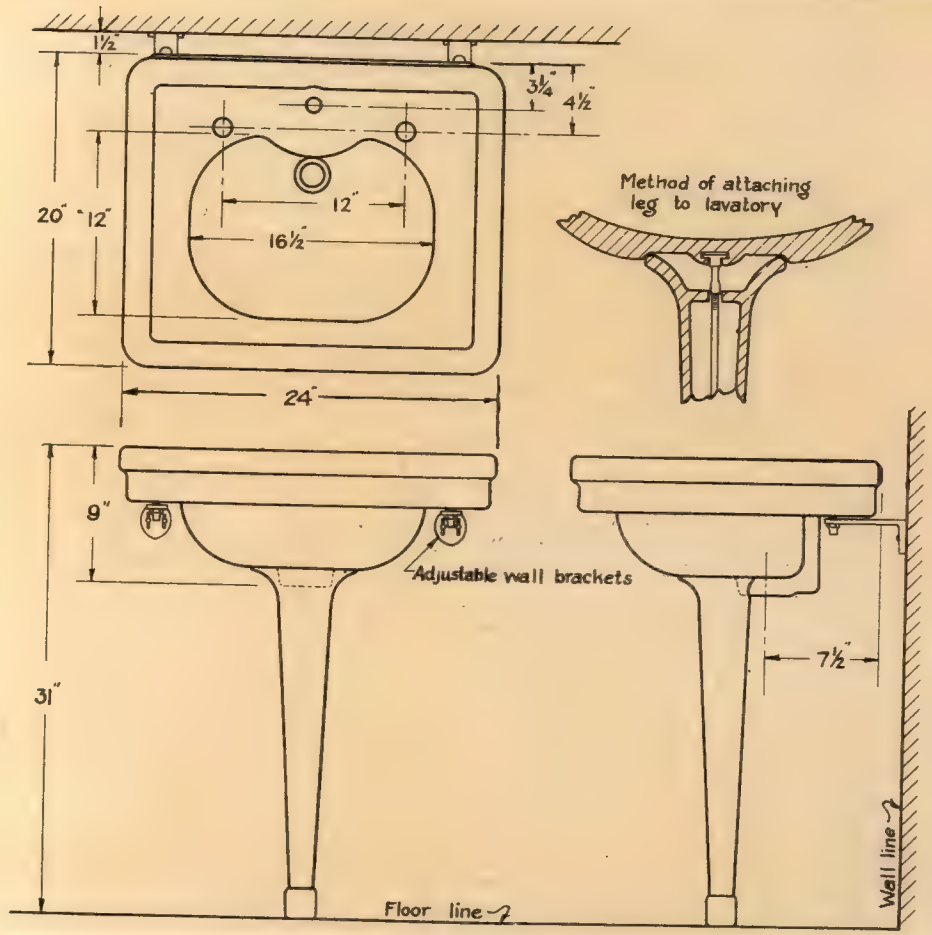

K-2205 Roughing Measurements

Measurements may vary from ¼ to ½ inch

The Madrid K-2205 lavatory is also furnished with pedestal instead of leg for use when set in the middle of the room in battery.

MADBURY K-2207

White Vitreous China Straight Front Integral Supply Nozzle Barber Lavatory and Leg

SPECIFICATION:

White Vitreous China Straight Front Barber Lavatory; Size 20x24 inches, with Integral Supply Nozzle, Cleansing Overflow Feature, Square Bowl 6½ inches deep, Hooded Overflow, Anti-splash Rim and Vitreous China Leg with Rod. Fitted with Built-in Compression Supply Valves with China Cross-arm Handles and Escutcheons, Built-in Compression Shampoo Fixture, ½-inch size, with China Cross-arm Handles and Escutcheons, Rubber Hose, Shampoo Sprinkler and Hook, N. P. Brass Waste Plug for continuous Flow, 1¼- or 1½-inch N. P. Brass "P" Trap to wall with China Escutcheon and ½-inch N. P. Brass Supply Pipe to Lavatory with China Escutcheon.

DIMENSIONS:

Lavatory, inches	20x24
Approximate weight, packed, Lavatory and Leg, pounds	138

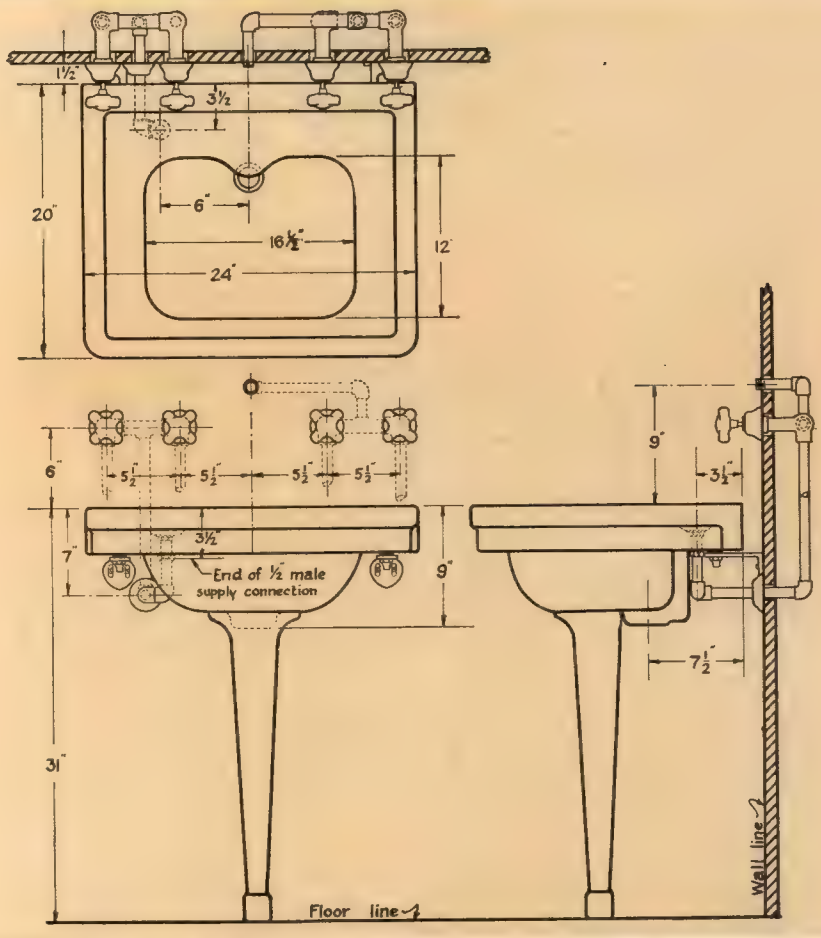

K-2207 Roughing Measurements

Measurements may vary from ¼ to ½ inch

The integral supply nozzle and concealed valves eliminate the use of metal fittings on top of the lavatory making it exceedingly easy to keep clean.

MADBURY K-2208

White Vitreous China Straight Front Integral Supply Nozzle Public Comfort Station Lavatory and Leg

SPECIFICATION:

White Vitreous China Straight Front Public Comfort Station Lavatory; Size (see below), with Integral Supply Nozzle, Cleansing Overflow Feature, Square Bowl 6½ inches deep, Hooded Overflow, Anti-splash Rim and Vitreous China Leg with Rod. Fitted with Self-closing Foot Acting Push Button Supply Valves built in the floor, N. P. Brass Waste Plug for continuous flow, 1¼- or 1½-inch N. P. Brass "P" Trap to wall with China Escutcheon and ⅜-inch N. P. Brass Supply Pipe to Lavatory with China Escutcheon.

DIMENSIONS:

Lavatory, inches	18x20	20x24
Approximate weight, packed, Lavatory and Leg, pounds	112	138

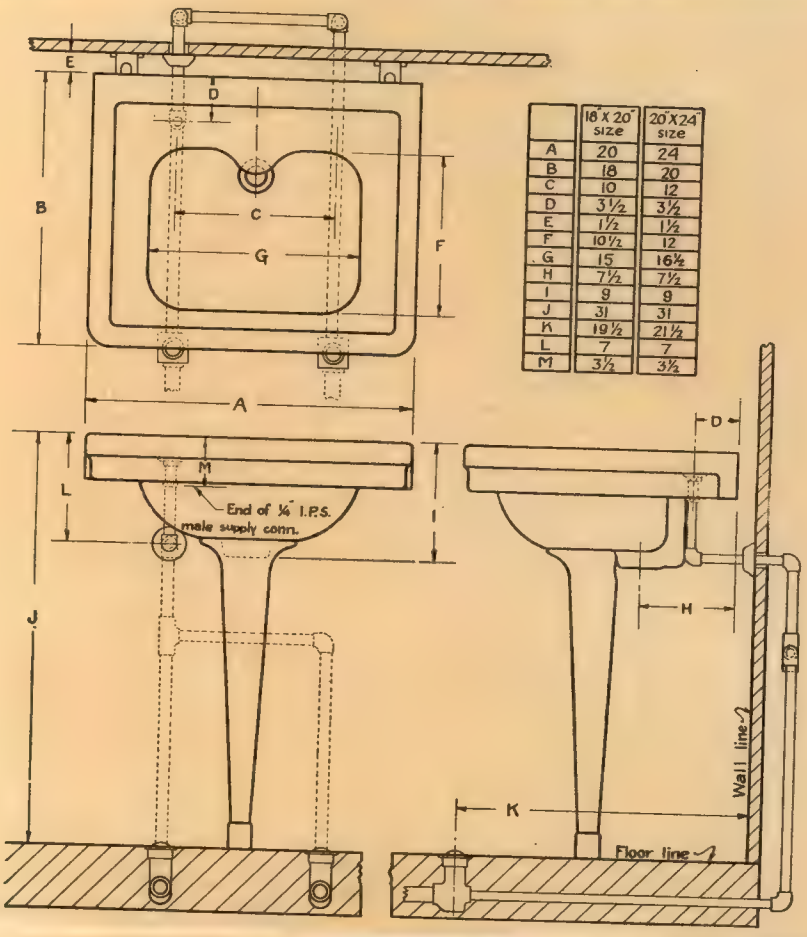

	18" X 20" size	20" X 24" size
A	20	24
B	18	20
C	10	12
D	3½	3½
E	1½	1½
F	10½	12
G	15	16½
H	7½	7½
I	9	9
J	31	31
K	19½	21½
L	7	7
M	3½	3½

K-2208 Roughing Measurements

Measurements may vary from ¼ to ½ inch

This lavatory is especially adapted for public comfort stations. Having an integral supply nozzle it eliminates all metal fittings from the top of the lavatory, thereby making it easy to keep clean. The valves being concealed in the floor, the user does not touch any part of the fixture. Nothing but vitreous china fixtures should be considered for public comfort stations because of the hard usage to which they are subjected.

MADRID K-2209

White Vitreous China Straight Front
Surgical Lavatory and Leg

SPECIFICATION:

White Vitreous China Straight Front Surgical Lavatory; Size (see below), with Bowl 6½ inches deep, Hooded Overflow, Anti-splash Rim, Vitreous China Leg with Rod and N. P. Brass Wall Brackets. Fitted with N. P. Brass Elbow Action Mixing Valve with Lock-shield Controlling Valves, ½-inch Elbow Supplies to wall with N. P. Brass Escutcheons and Spray Regulator Nozzle, N. P. Brass Plug for continuous flow and 1¼-inch N. P. Brass "P" Trap to wall with China Escutcheon.

DIMENSIONS:

Lavatory, inches	18x20	20x24
Approximate weight, packed, Lavatory and Leg, pounds	110	135

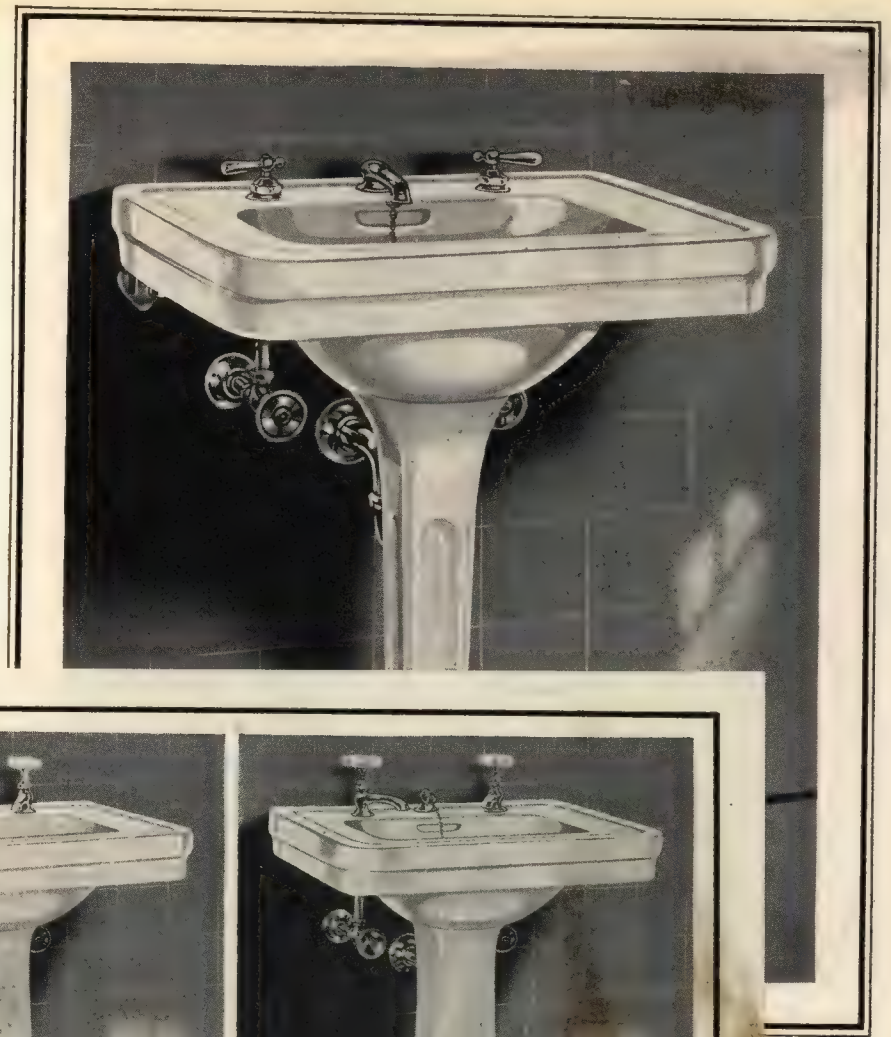

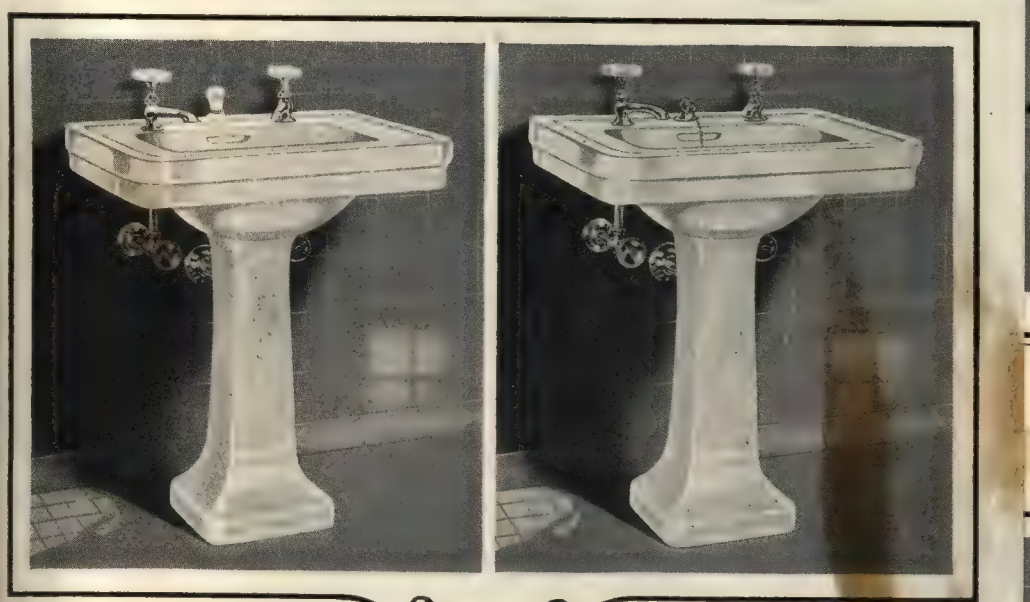

MADGLEN K-2010A

MADGLEN K-2010C

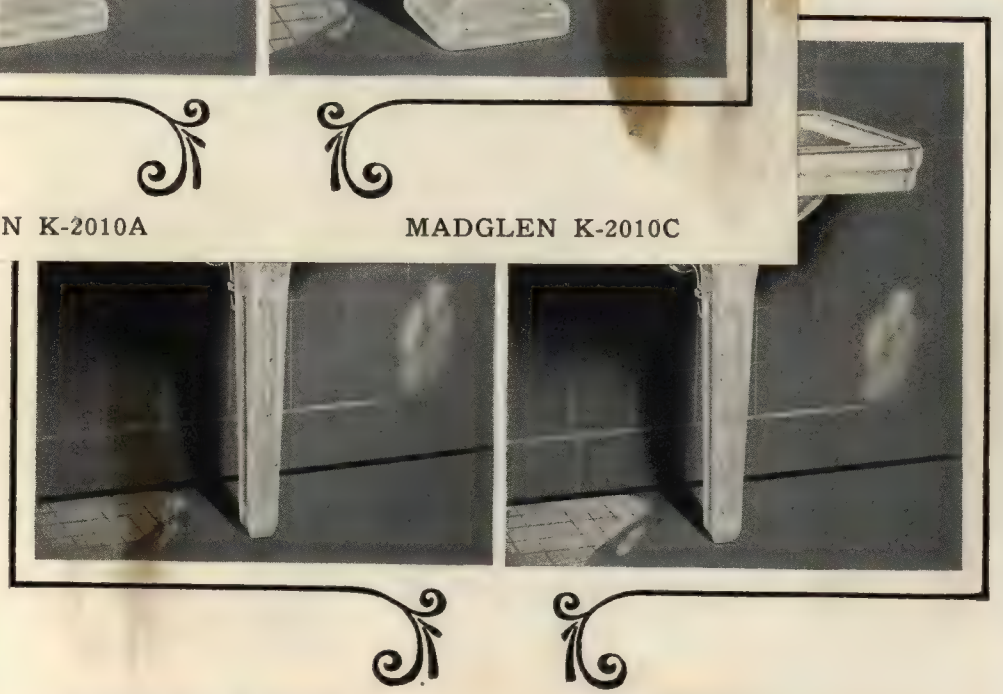

MADGLEN K-2210A

MADGLEN K-2210C

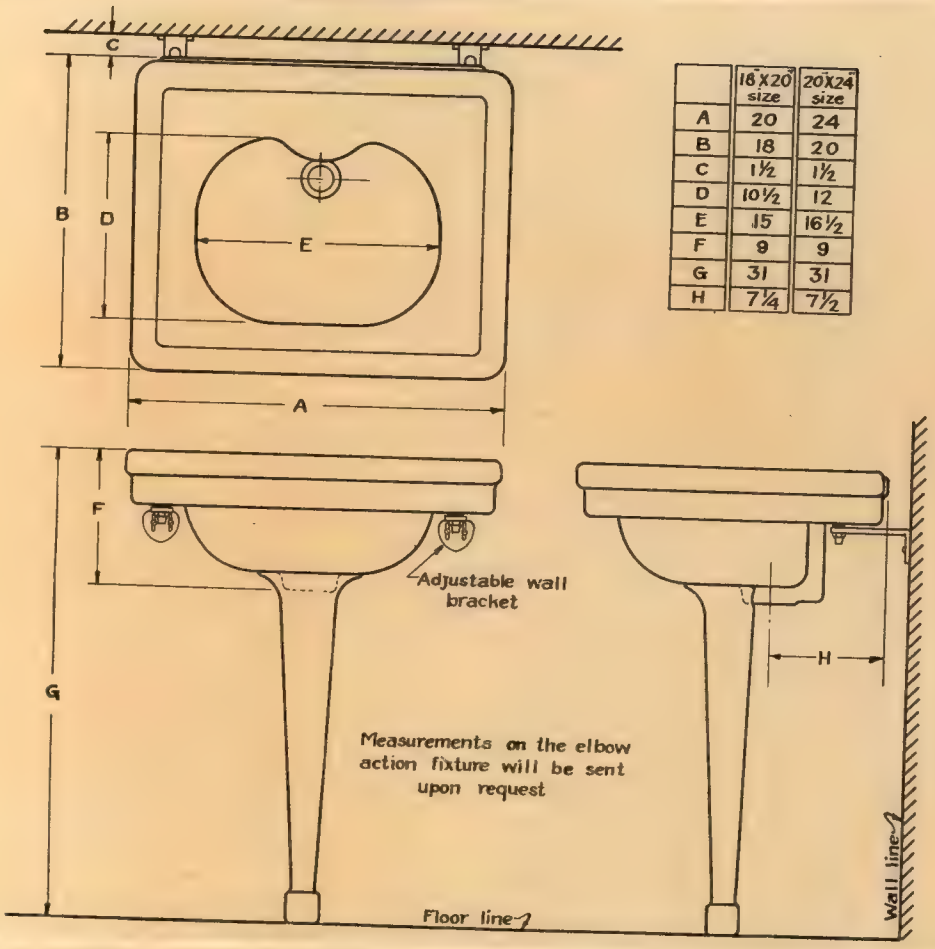

	18 X 20 size	20 X 24 size
A	20	24
B	18	20
C	1½	1½
D	10½	12
E	15	16½
F	9	9
G	31	31
H	7¼	7½

K-2209 Roughing Measurements

Measurements may vary from ¼ to ½ inch

The water is supplied to the K-2209 surgical lavatory by means of an elbow action mixing valve. The hands need not come in contact with any part of the fixture. The glossy finish of the lavatory cannot be marred or tarnished by acids or medicines.

MADORF K-2212

White Vitreous China Round Front Integral Supply Nozzle Lavatory and Leg

SPECIFICATION:

White Vitreous China Round Front Lavatory; Size (see below), with Bowl 6½ inches deep, Integral Supply Nozzle, Cleansing Overflow Feature, Hooded Overflow, Anti-splash Rim, Vitreous China Leg with Rod and N. P. Brass Wall Brackets. Fitted with Compression Supply Valves with All-china Cross-arm Handles and Escutcheons, Pop-up Waste with All-china Knob and Escutcheon, 1¼- or 1½-inch N. P. Brass "P" Trap to wall with China Escutcheon and ⅜-inch N. P. Brass Supply Pipes to wall with Loose Key Stop Valves and China Wall Escutcheons.

DIMENSIONS:

Lavatory, inches	18x20	20x24
Approximate weight, packed complete, pounds	127	150

NOTE: As this Lavatory is made with an Integral Supply Nozzle, it is sold only with the fittings as shown, with or without Trap and Supply Pipes.

This Lavatory is also furnished to be tiled-in.

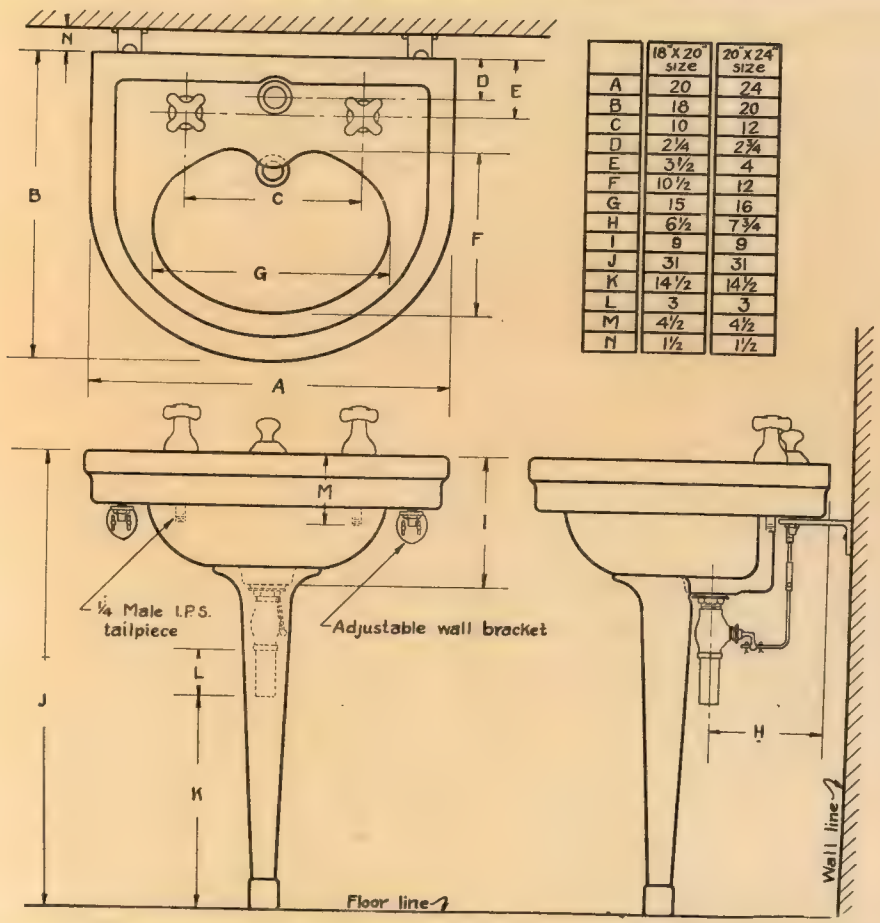

	18" x 20" size	20" x 24" size
A	20	24
B	18	20
C	10	12
D	2¼	2¾
E	3½	4
F	10½	12
G	15	16
H	6½	7¾
I	9	9
J	31	31
K	14½	14½
L	3	3
M	4½	4½
N	1½	1½

K-2212 Roughing Measurements

Measurements may vary from ¼ to ½ inch

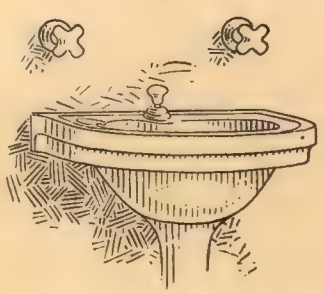

K-2212 A

Same as K-2212 except that the supply valves are built in the wall.

MADORF K-2214

White Vitreous China Round Front Integral Supply Nozzle Tiled-in Lavatory and Leg

SPECIFICATION:

White Vitreous China Round Front Tiled-in Lavatory; Size (see below), with Bowl 6½ inches deep, Integral Supply Nozzle, Cleansing Overflow Feature, Hooded Overflow, Anti-splash Rim and Vitreous China Leg with Rod. Fitted with Built-in Compression Supply Valves with China Cross-arm Handles and Escutcheons, Pop-up Waste with All-china Knob and Escutcheon, 1¼- or 1½-inch N. P. Brass "P" Trap to wall with China Escutcheon and ⅜-inch N. P. Brass Supply Pipe to Lavatory with China Escutcheon.

DIMENSIONS:

Lavatory, inches	18x20	20x24
Approximate weight, packed, Lavatory and Leg, pounds	110	133

NOTE: This Lavatory is also furnished to be set away from the wall.

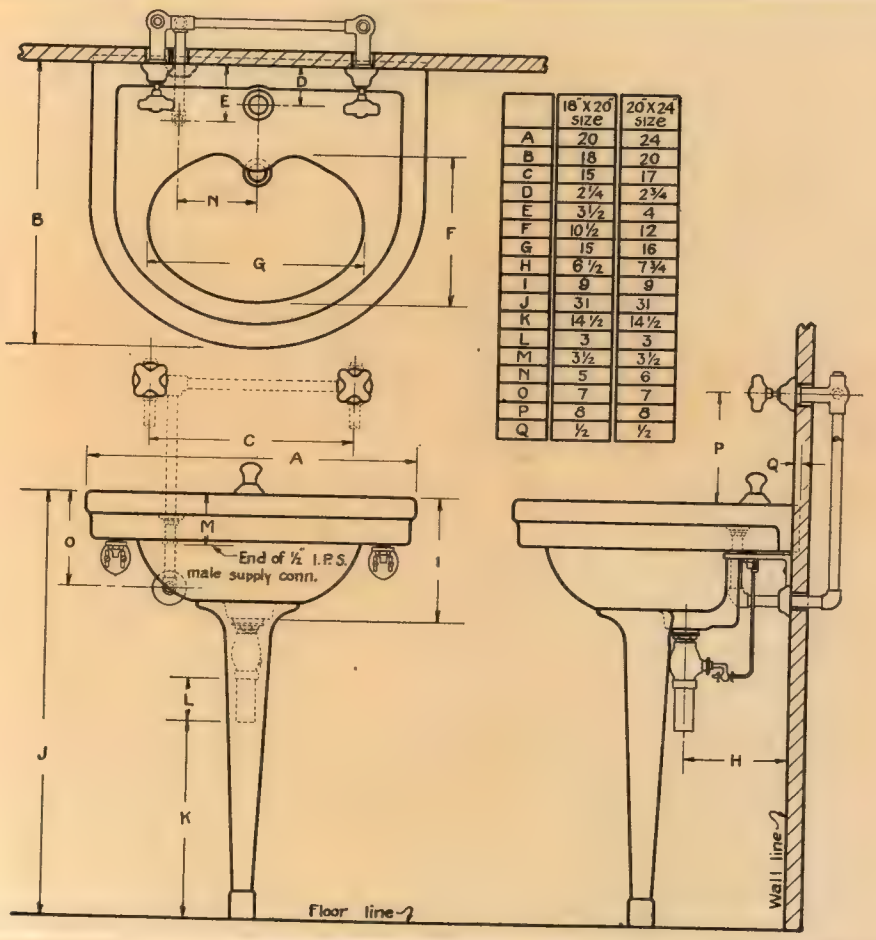

	18"X20" SIZE	20"X24" SIZE
A	20	24
B	18	20
C	15	17
D	2¼	2¾
E	3½	4
F	10½	12
G	15	16
H	6½	7¾
I	9	9
J	31	31
K	14½	14½
L	3	3
M	3½	3½
N	5	6
O	7	7
P	8	8
Q	½	½

K-2214 Roughing Measurements
Measurements may vary from ¼ to ½ inch

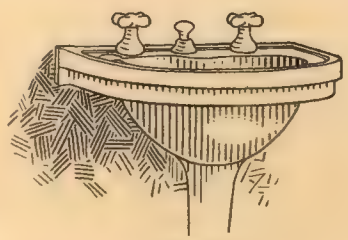

K-2214 B

Same as K-2214 except that the supply valves are on the lavatory.

MADORF K-2216

White Vitreous China Round Front Integral Supply Nozzle Lavatory with China Ice Water Attachment and Leg

SPECIFICATION:

White Vitreous China Round Front Lavatory; Size (see below), with Bowl 6½ inches deep, Integral Supply Nozzle, Cleansing Overflow Feature, Integral China Ice Water Attachment, Hooded Overflow, Anti-splash Rim, Vitreous China Leg with Rod and N. P. Brass Wall Brackets. Fitted with Compression Supply Valves with All-china Cross-arm Handles and Escutcheons, All-china Self-closing Push Button Ice Water Attachment, Pop-up Waste with All-china Knob and Escutcheon, 1¼- or 1½-inch N. P. Brass "P" Trap to wall with China Escutcheon and ⅜-inch N. P. Brass Supply Pipes to wall with Loose Key Stop Valves and China Wall Escutcheons.

DIMENSIONS:

Lavatory, inches	18x20	20x24
Approximate weight, packed complete, pounds	130	155

NOTE: As this Lavatory is made with an Integral Supply Nozzle, it is sold only with the fittings as shown, with or without Trap and Supply Pipes.
This Lavatory is also furnished to be tiled-in.

THOMAS MADDOCK'S SONS COMPANY

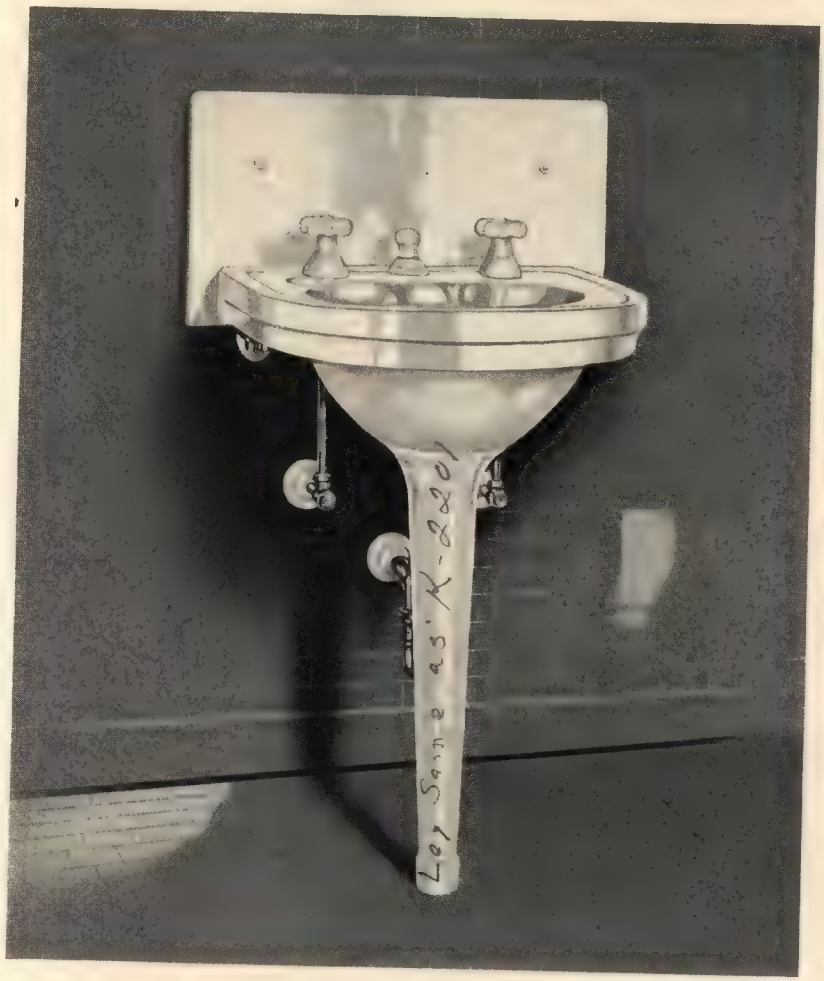

MADORF K-2218

MADE OF

DUROCK

White Vitreous China Round Front Integral Supply Nozzle Lavatory and Leg. Shown with Vitrolite slab on the wall

SPECIFICATION:

White Vitreous China Round Front Lavatory; Size (see below), with Bowl 6½ inches deep, Integral Supply Nozzle, Cleansing Overflow Feature, Hooded Overflow, Anti-splash Rim, Vitreous China Leg with Rod and N. P. Brass Wall Brackets. Fitted with Compression Supply Valves with All-china Cross-arm Handles and Escutcheons, Pop-up Waste with All-china Knob and Escutcheon, 1¼- or 1½-inch N. P. Brass "P" Trap to wall with China Escutcheon and ⅜-inch N. P. Brass Supply Pipes to wall with Loose Key Stop Valves and China Wall Escutcheons.

DIMENSIONS:

Lavatory, inches	18x20	20x24
Approximate weight, packed complete, pounds	127	150

NOTE: As this Lavatory is made with an Integral Supply Nozzle, it is sold only with the fittings as shown, with or without Trap and Supply Pipes.

(For roughing measurements, see reverse side)

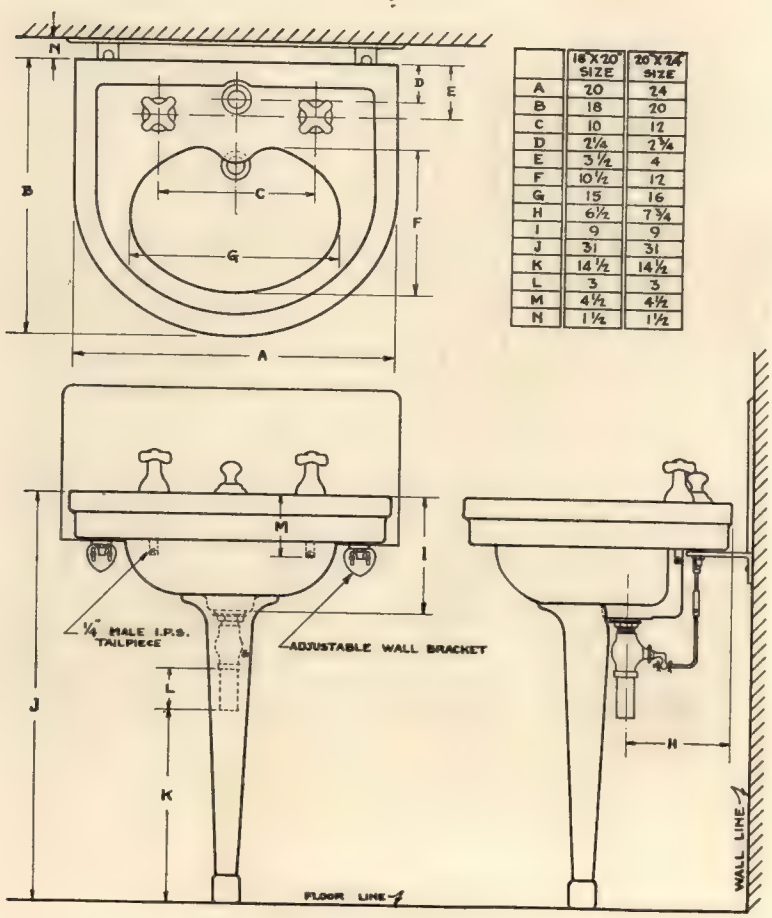

	18"X20" SIZE	20"X24" SIZE
A	20	24
B	18	20
C	10	12
D	2¼	2¾
E	3½	4
F	10½	12
G	15	16
H	6½	7¾
I	9	9
J	31	31
K	14½	14½
L	3	3
M	4½	4½
N	1½	1½

K-2218 Roughing Measurements

Measurements may vary from ¼ to ½ inch

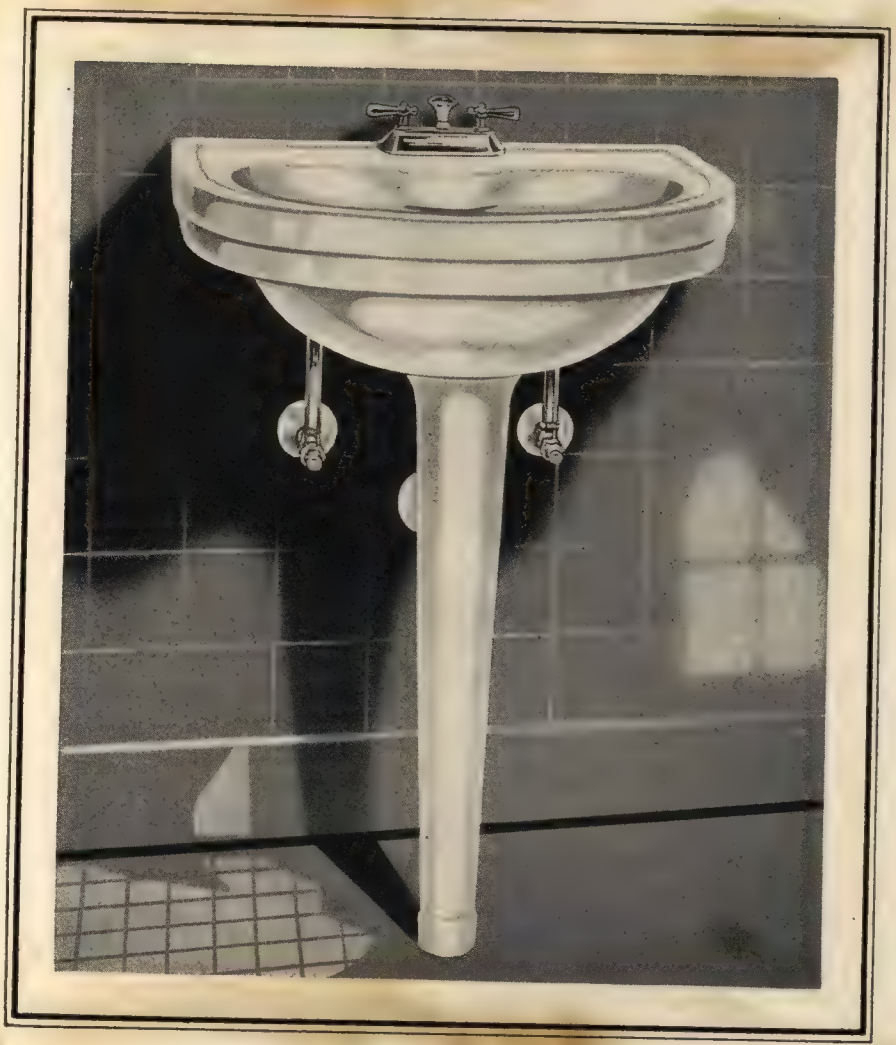

MADKEN K-2220

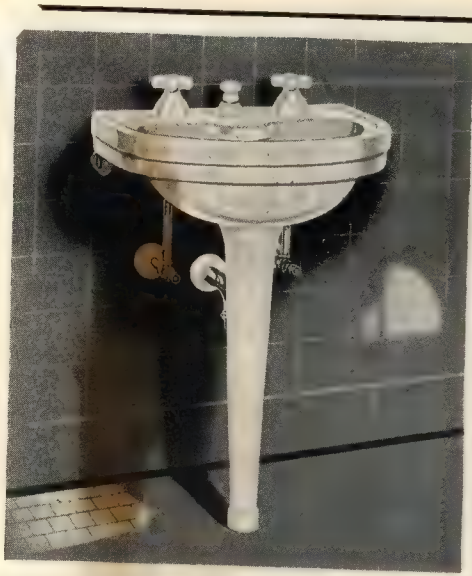

MADKEN K-2224

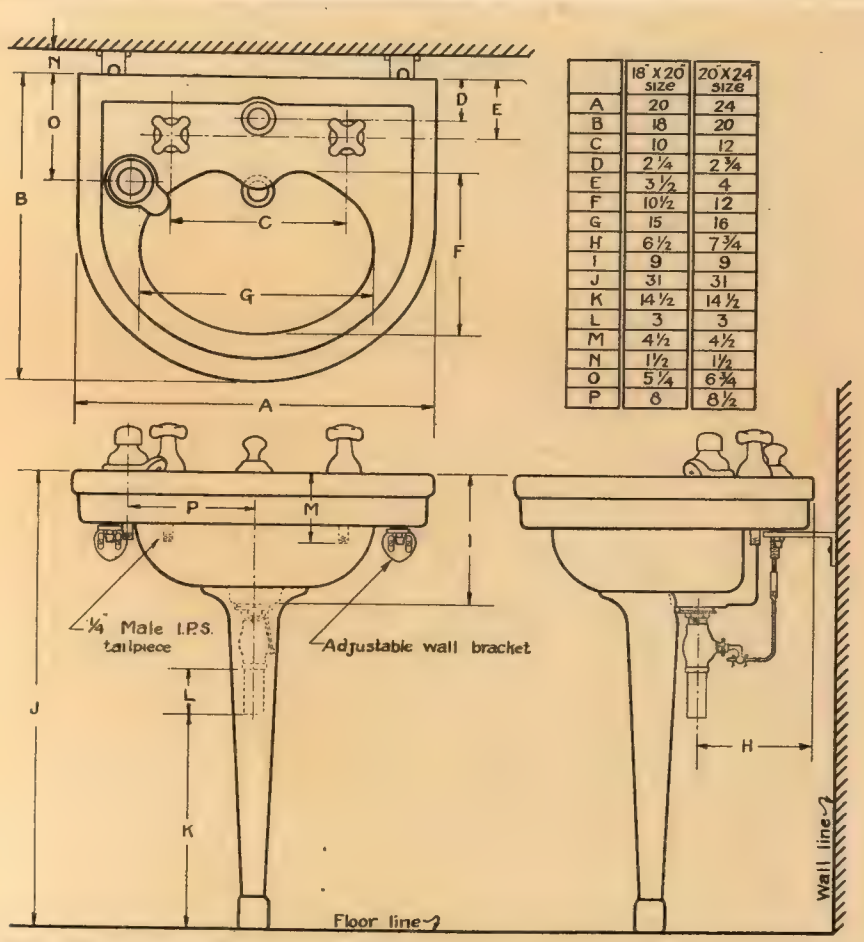

	18" x 20" SIZE	20" x 24" SIZE
A	20	24
B	18	20
C	10	12
D	2 1/4	2 3/4
E	3 1/2	4
F	10 1/2	12
G	15	16
H	6 1/2	7 3/4
I	9	9
J	31	31
K	14 1/2	14 1/2
L	3	3
M	4 1/2	4 1/2
N	1 1/2	1 1/2
O	5 1/4	6 3/4
P	8	8 1/2

K-2216 Roughing Measurements

Measurements may vary from ¼ to ½ inch

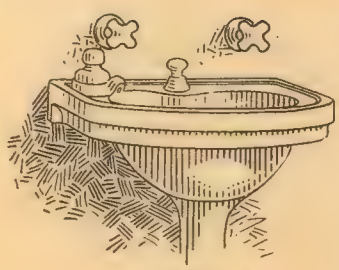

K-2216 A

Same as K-2216 except that the hot and cold supply valves are built in the wall.

MADRID K-2230

White Vitreous China Straight Front Lavatory and Iron Leg

SPECIFICATION:

White Vitreous China Straight Front Lavatory; Size (see below), with Bowl 6½ inches deep, Hooded Overflow, Anti-splash Rim, Galvanized Iron Leg and N. P. Brass Wall Brackets. Fitted with Vitreous China Soap Dish, N. P. Brass Combination Supply Fixture with Raised Rose Spray Nozzle and China Indexed Handles, N. P. Brass Plug, Chain, Chainstay and Rubber Stopper and 1¼-inch N. P. Brass "P" Trap.

DIMENSIONS:

Lavatory, inches	18x20	20x24
Approximate weight, packed, Lavatory and Leg, pounds	110	135

NOTE: Specify number desired in battery.

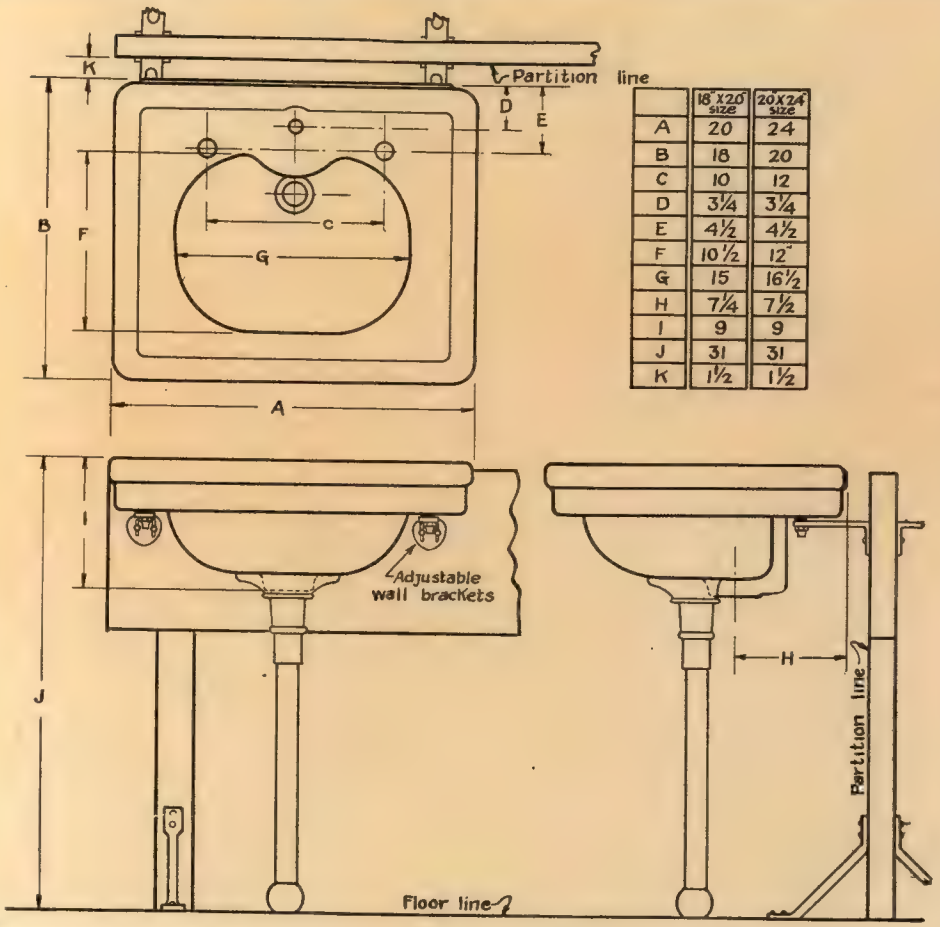

	18" x 20" size	20" x 24" size
A	20	24
B	18	20
C	10	12
D	3¼	3¼
E	4½	4½
F	10½	12"
G	15	16½
H	7¼	7½
I	9	9
J	31	31
K	1½	1½

K-2230 Roughing Measurements

Measurements may vary from ¼ to ½ inch

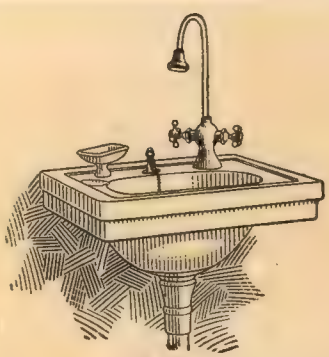

K-2230 A

This lavatory is the same as those shown in K-2230. It is for use when installed against the wall.

MADBIEN K-2234

White Vitreous China Round Front Lavatory with 3-inch Integral Back

SPECIFICATION:

White Vitreous China Round Front Lavatory with 3-inch Integral Back and Depressed Soap Dish; Size (see below), with extra large Bowl 5½ inches deep and open Overflow. Fitted with N. P. Brass Compression Faucets with China Indexed Handles, 1¼-inch N. P. Brass Outlet Plug with Chain and Rubber Stopper and 1¼-inch N. P. Brass "P" Trap.

DIMENSIONS:

Lavatory, inches	15x18	17x20
Approximate weight, packed, Lavatory only, pounds	45	55

NOTE: Specify number desired in battery.

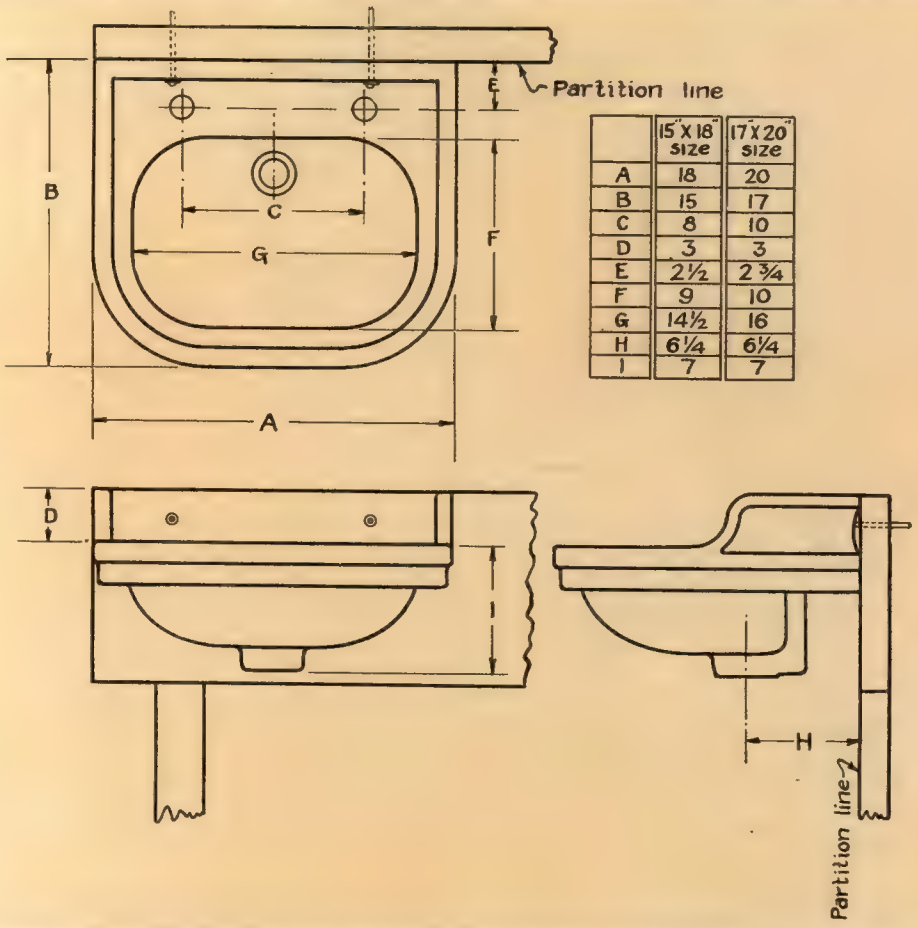

	15"X18" size	17"X20" size
A	18	20
B	15	17
C	8	10
D	3	3
E	2½	2¾
F	9	10
G	14½	16
H	6¼	6¼
I	7	7

K-2234 Roughing Measurements

Measurements may vary from ¼ to ½ inch

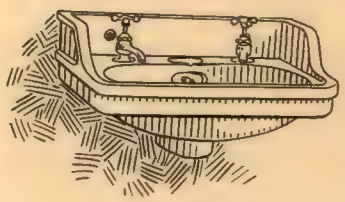

K-2234 A

This lavatory is the same as those shown in K-2234. It is for use when installed against the wall.

DISCONTINUED

MADADORE K-2303

White Vitreous China Manicuring Table and Leg

SPECIFICATION:

White Vitreous China Manicuring Table; Size 18x32 inches, Diameter of Bowl 6½ inches, with Integral Supply, Hooded Overflow, Vitreous China Leg with Rod and N. P. Brass Wall Brackets. Fitted with Compression Supply Valves with All-china Cross-arm Handles and Escutcheons, Pop-up Waste with All-china Knob and Escutcheon, 1¼-inch N. P. Brass "P" Trap to wall with China Escutcheon and ⅜-inch N. P. Brass Supply Pipes to wall with China Handle Stop Valves and China Wall Escutcheons.

DIMENSIONS:

Table, inches	18x32
Approximate weight, packed complete, pounds	150

MADELIA K-2315

MADELIA K-2315A

MADELIA K-2315C

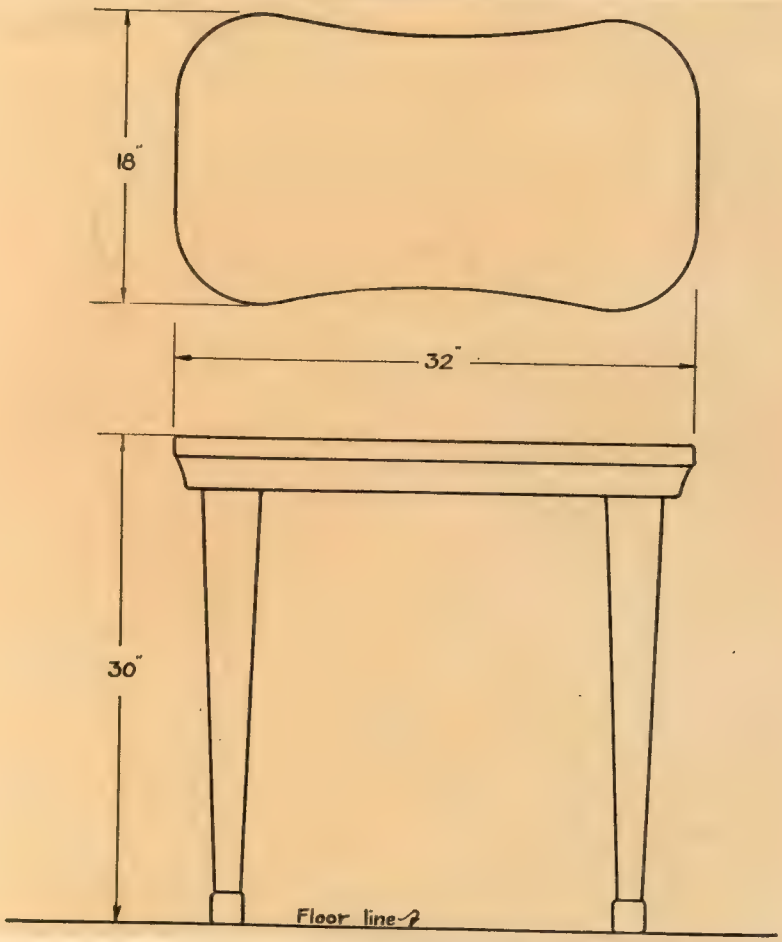

K-2310 Roughing Measurements

Measurements may vary from ¼ to ½ inch

A vitreous china dressing table is a valued addition to the bathroom because the surface cannot become scratched or stained by articles generally used in making the toilet. The top will always remain clean and sanitary because nothing will adhere to its smooth, glossy surface.

MADBURY K-2400

White Vitreous China Straight Front Integral Supply Nozzle Lavatory on Concealed Wall Brackets

SPECIFICATION:

White Vitreous China Straight Front Lavatory on Concealed Wall Brackets; Size (see below), with Integral Supply Nozzle, Cleansing Overflow Feature, Square Bowl 6½ inches deep, Hooded Overflow and Anti-splash Rim. Fitted with Compression Supply Valves with All-china Cross-arm Handles and Escutcheons, Pop-up Waste with All-china Knob and Escutcheon, 1¼- or 1½-inch N. P. Brass "P" Trap to wall with China Escutcheon and ⅜-inch N. P. Brass Supply Pipes to wall with Loose Key Stop Valves and China Wall Escutcheons.

DIMENSIONS:

Lavatory, inches	18x20	20x24
Approximate weight, packed complete less brackets, pounds	110	140

NOTE: As this Lavatory is made with an Integral Supply Nozzle, it is sold only with the fittings as shown, with or without Trap and Supply Pipes.

The above Lavatory can be used with any Concealed Wall Bracket that will adapt itself to the Lavatory measurements given on the next page.

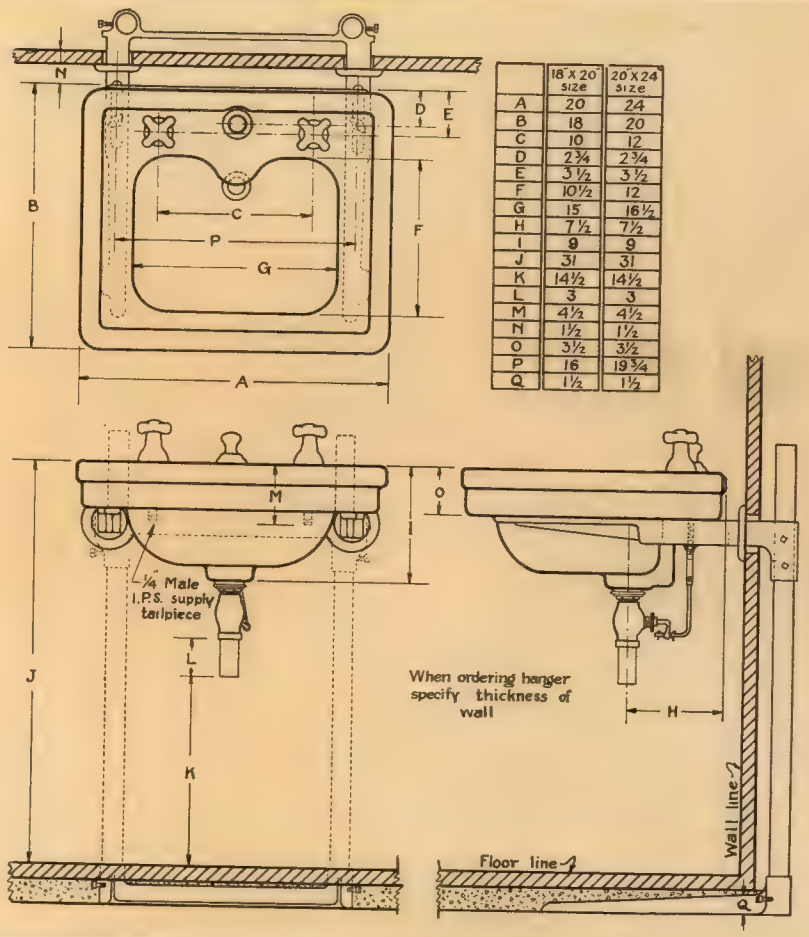

	18"X20" Size	20"X24" Size
A	20	24
B	18	20
C	10	12
D	2¾	2¾
E	3½	3½
F	10½	12
G	15	16½
H	7½	7½
I	9	9
J	31	31
K	14½	14½
L	3	3
M	4½	4½
N	1½	1½
O	3½	3½
P	16	19¾
Q	1½	1½

K-2400 Roughing Measurements

Measurements may vary from ¼ to ½ inch

Features of the Madbury Lavatory

Integral Supply Nozzle
Cleansing Overflow Feature
Large Square Bowl
Hooded Overflow
Anti-splash Rim
Titan Webbed Handles

All metal parts above the slab are completely covered with china

MADBURY K-2401

White Vitreous China Straight Front Integral Supply Nozzle Beauty Parlor Lavatory on Concealed Wall Brackets

SPECIFICATION:

White Vitreous China Straight Front Beauty Parlor Lavatory on Concealed Wall Brackets; Size 20x24 inches, with Integral Supply Nozzle, Cleansing Overflow Feature, Square Bowl 6½ inches deep, Hooded Overflow and Anti-splash Rim. Fitted with Compression Supply Valves with All-china Cross-arm Handles and Escutcheons, Built-in Compression Shampoo Fixture, ½-inch size, with China Cross-arm Handles and Escutcheons, Rubber Hose, Shampoo Sprinkler and Hook, Pop-up Waste with All-china Knob and Escutcheon, 1¼- or 1½-inch N. P. Brass "P" Trap to wall with China Escutcheon and ⅜-inch N. P. Brass Supply Pipes to wall with Loose Key Stop Valves and China Wall Escutcheons.

DIMENSIONS:

Lavatory, inches	20x24
Approximate weight, packed complete less brackets, pounds	140

NOTE: As this Lavatory is made with an Integral Supply Nozzle, it is sold only with the fittings as shown, with or without Trap and Supply Pipes and Shampoo Fixture.

The above Lavatory can be used with any Concealed Wall Bracket that will adapt itself to the Lavatory measurements given on the next page.

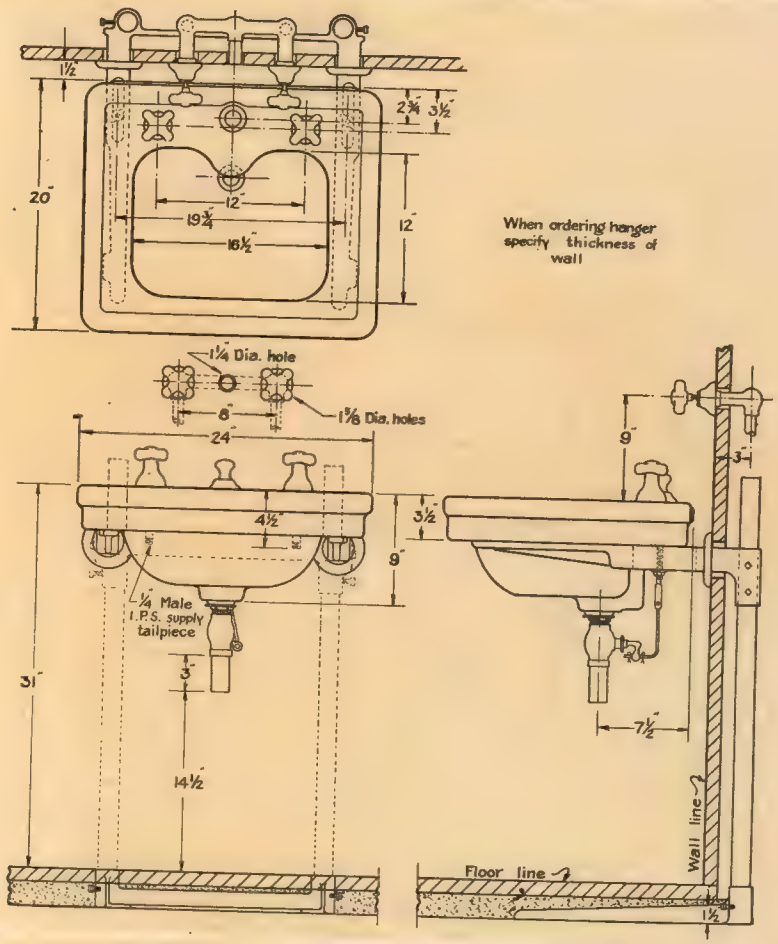

K-2401 Roughing Measurements

Measurements may vary from ¼ to ½ inch

Features of the Madbury Lavatory

Integral Supply Nozzle
Cleansing Overflow Feature
Large Square Bowl
Hooded Overflow
Anti-splash Rim
Titan Webbed Handles

All metal parts above the slab are completely covered with china

MADBURY K-2403

White Vitreous China Straight Front Integral Supply Nozzle Lavatory with 6-inch Integral Back and Concealed Hanger

SPECIFICATION:

White Vitreous China Straight Front Integral Supply Nozzle Lavatory with 6-inch Integral Back; Size 19x20 inches, with Integral Supply Nozzle, Cleansing Overflow Feature, Square Bowl 6½ inches deep, Hooded Overflow, Anti-splash Rim and Concealed Hanger. Fitted with Compression Supply Valves with All-china Cross-arm Handles and Escutcheons, Pop-up Waste with All-china Knob and Escutcheon, 1¼- or 1½-inch N. P. Brass "P" Trap to wall with China Escutcheon and ⅜-inch N. P. Brass Supply Pipes to wall with Loose Key Stop Valves and China Wall Escutcheons.

DIMENSIONS:

Lavatory, inches	19x20
Approximate weight, packed complete, pounds	116

NOTE: As this Lavatory is made with an Integral Supply Nozzle, it is sold only with the fittings as shown, with or without Trap and Supply Pipes.

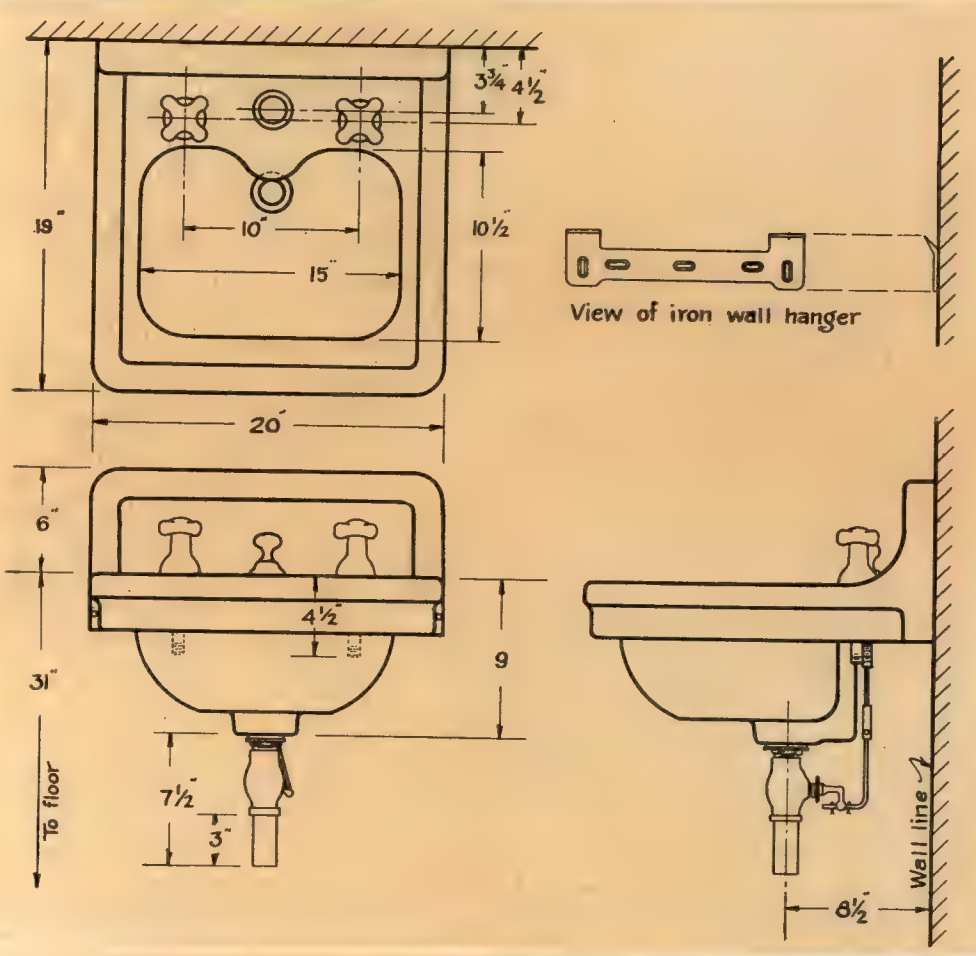

K-2403 Roughing Measurements

Measurements may vary from ¼ to ½ inch

Features of the Madbury Lavatory

Integral Supply Nozzle
Cleansing Overflow Feature
Large Square Bowl
Hooded Overflow
Anti-splash Rim
Titan Webbed Handles

All metal parts above the slab are completely covered with china

DISCONTINUED

MADBIEN K-2404

White Vitreous China Round Front Lavatory with 3-inch Integral Back and White Painted Iron Wall Brackets

SPECIFICATION:

White Vitreous China Round Front Lavatory with 3-inch Integral Back and Depressed Soap Dish; Size (see below), with extra large Bowl 5½ inches deep, open Overflow and White Painted Iron Wall Brackets. Fitted with N. P. Brass Compression Faucets with China Indexed Handles, 1¼-inch N. P. Brass Outlet Plug with Chain and Rubber Stopper, 1¼-inch N. P. Brass "P" Trap to wall with Escutcheon and ⅜-inch N. P. Brass Supply Pipes to wall with Wall Escutcheons.

DIMENSIONS:

Lavatory, inches	15x18	17x20	19x24
Approximate weight, packed, Lavatory and Brackets, pounds	45	55	95

MADFORD K-2406

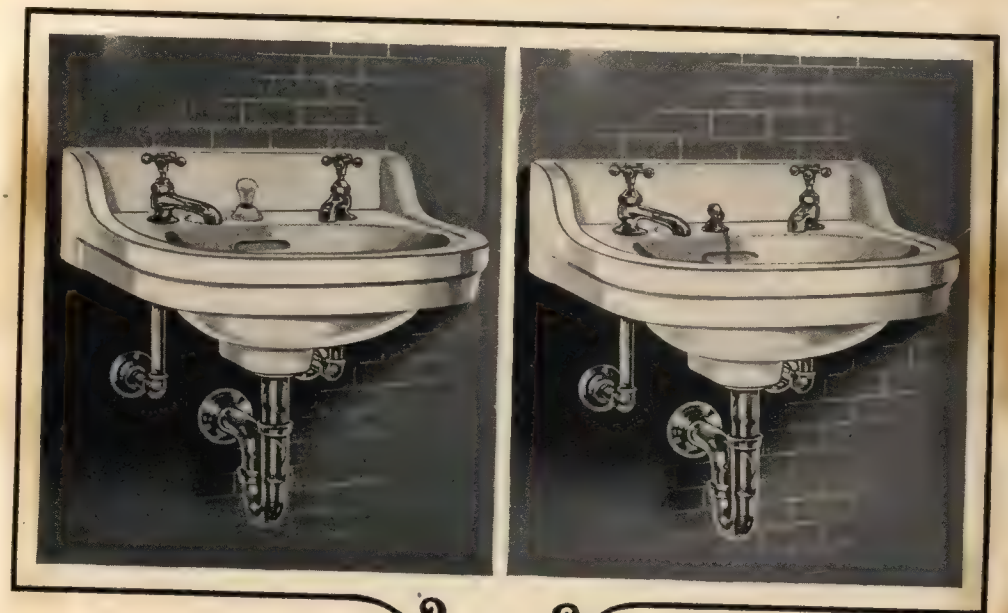

MADFORD K-2406A

MADFORD K-2406C

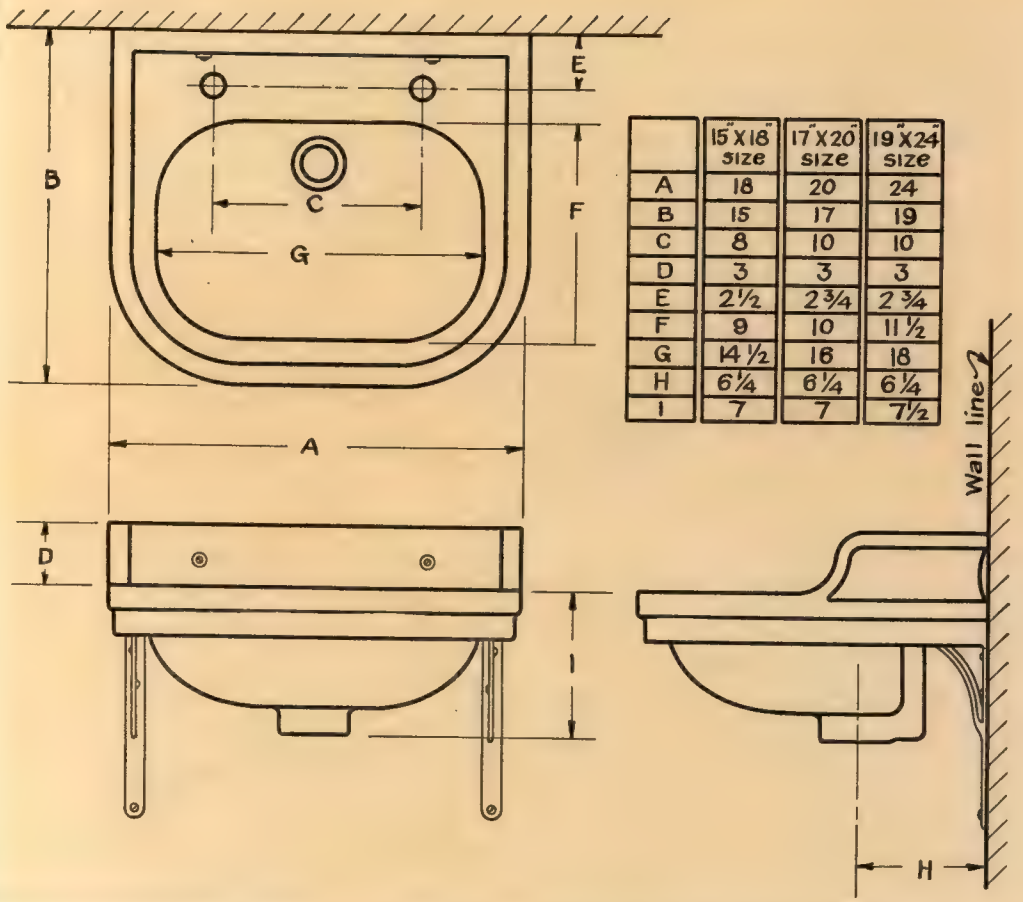

	15"X18" size	17"X20" size	19"X24" size
A	18	20	24
B	15	17	19
C	8	10	10
D	3	3	3
E	2½	2¾	2¾
F	9	10	11½
G	14½	16	18
H	6¼	6¼	6¼
I	7	7	7½

K-2404 Roughing Measurements

Measurements may vary from ¼ to ½ inch

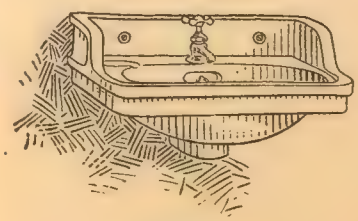

K-2404 A

Same as K-2404 except with only one faucet in the centre.

MADRID K-2407

White Vitreous China Straight Front Lavatory with 6-inch Integral Back and Concealed Hanger

SPECIFICATION:

White Vitreous China Straight Front Lavatory with 6-inch Integral Back; Size 18x20 inches, with Bowl 6½ inches deep, Hooded Overflow, Anti-splash Rim and Concealed Hanger. Fitted with N. P. Brass Compression Faucets with China Cross-arm Handles, Pop-up Waste with China Knob and Escutcheon, 1¼-inch N. P. Brass "P" Trap to wall with China Escutcheon and ⅜-inch N. P. Brass Supply Pipes to wall with Loose Key Stop Valves and China Wall Escutcheons.

DIMENSIONS:

Lavatory, inches	18x20
Approximate weight, packed, Lavatory and Hanger, pounds	108

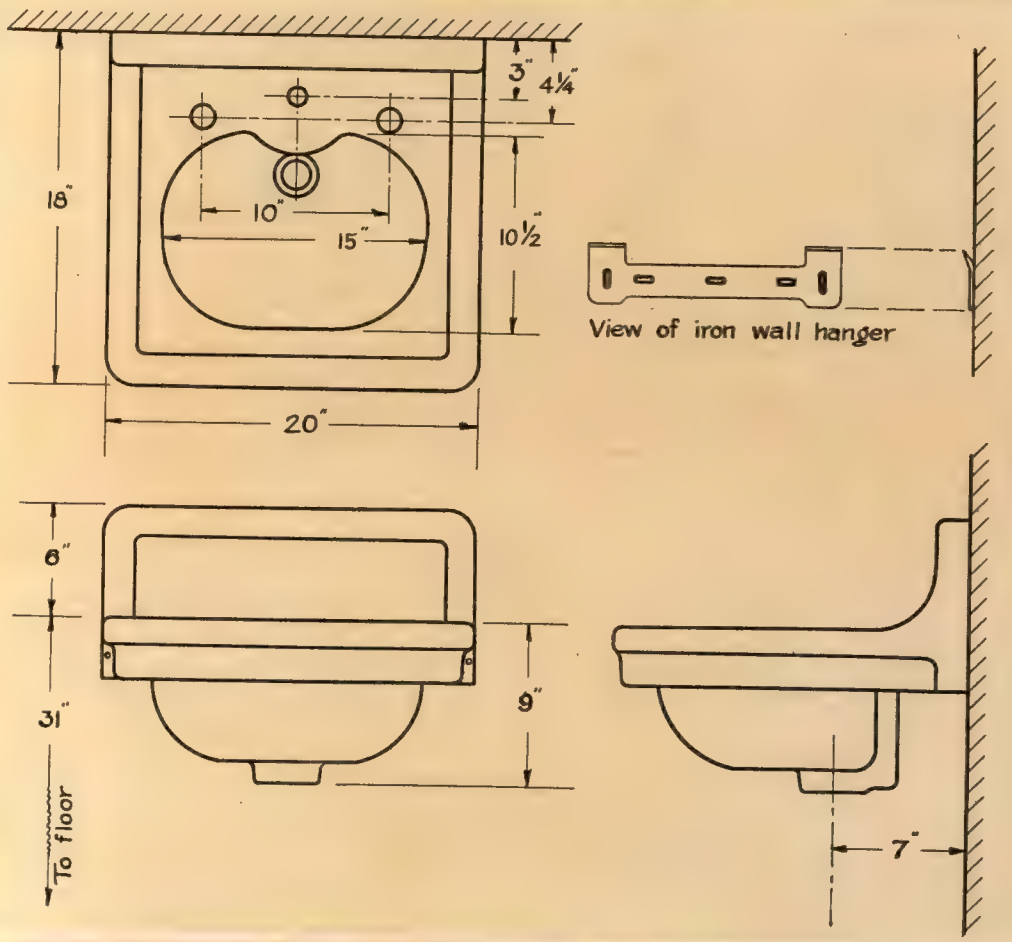

K-2407 Roughing Measurements

Measurements may vary from ¼ to ½ inch

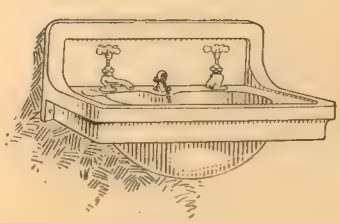

K-2407 B

Same as K-2407 except with plug, chain and chainstay

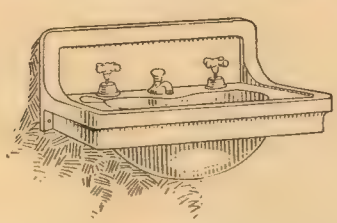

K-2407 C

Same as K-2407 except with combination supply and pop-up waste fixture

Fitting substitutions pages 72 and 73

MADBURY K-2409

White Vitreous China Straight Front Integral Supply Nozzle Tiled-in Barber Lavatory on Concealed Wall Brackets

SPECIFICATION:

White Vitreous China Straight Front Tiled-in Barber Lavatory on Concealed Wall Brackets; Size 20x24 inches, with Integral Supply Nozzle, Cleansing Overflow Feature, Square Bowl 6½ inches deep, Hooded Overflow and Anti-splash Rim. Fitted with Built-in Compression Supply Valves with China Cross-arm Handles and Escutcheons, Built-in Compression Shampoo Fixture, ½-inch size, with China Cross-arm Handles and Escutcheons, Rubber Hose, Shampoo Sprinkler and Hook, N. P. Brass Waste Plug for continuous flow, 1¼- or 1½-inch N. P. Brass "P" Trap to wall with China Escutcheon and ½-inch N. P. Brass Supply Pipe to Lavatory with China Escutcheon.

DIMENSIONS:

Lavatory, inches	20x24
Approximate weight, packed, Lavatory only, pounds	125

NOTE: The above Lavatory can be used with any Concealed Wall Bracket that will adapt itself to the Lavatory measurements given on the next page.

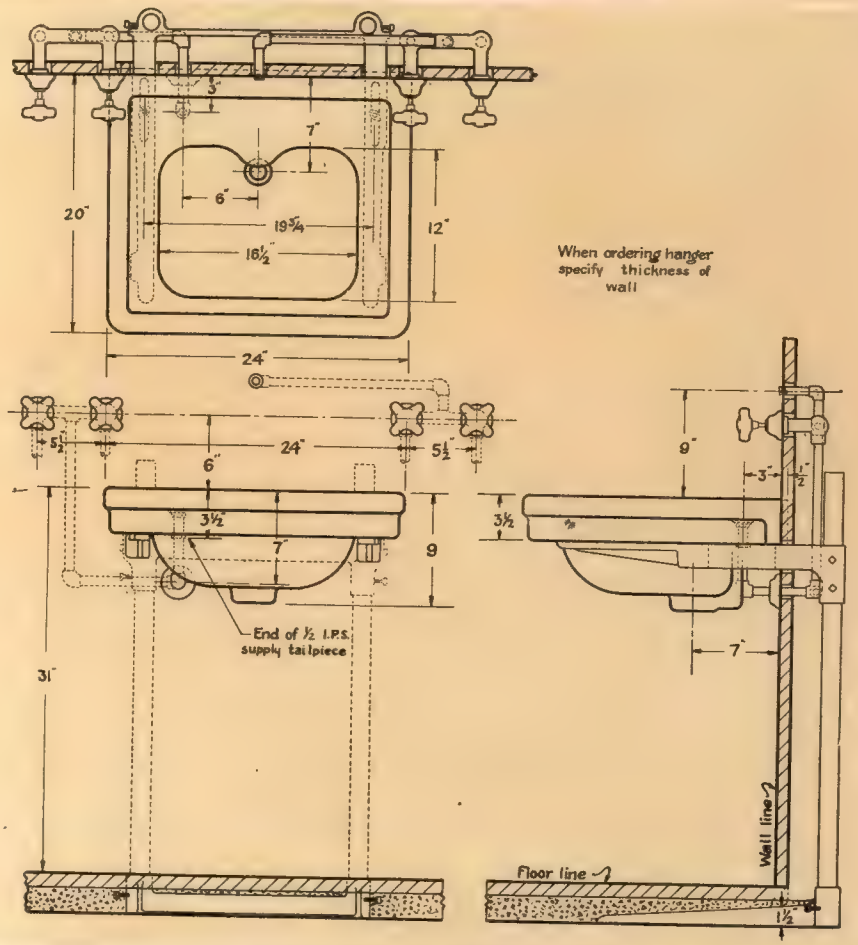

K-2409 Roughing Measurements

Measurements may vary from ¼ to ½ inch

The Madbury K-2409 barber lavatory has the fixtures built in the wall so that the slab is entirely free for use by the barber. Being supported on brackets there is nothing under the lavatory to interfere with the user.

MADCELL K-2419

White Vitreous China Prison Lavatory with Integral Supply Nozzle and 6-inch Integral Back

SPECIFICATION:

White Vitreous China Prison Lavatory with 6-inch Integral Back and Corner Soap Dish; Size 13x14 inches, with Integral Supply Nozzle and Slow-draining Outlet carried to wall. Fitted with Self-closing Push Button Supply Valve and 1½-inch Male Outlet Spud.

DIMENSIONS:

Lavatory, inches	13x14
Approximate weight, packed complete, pounds	75

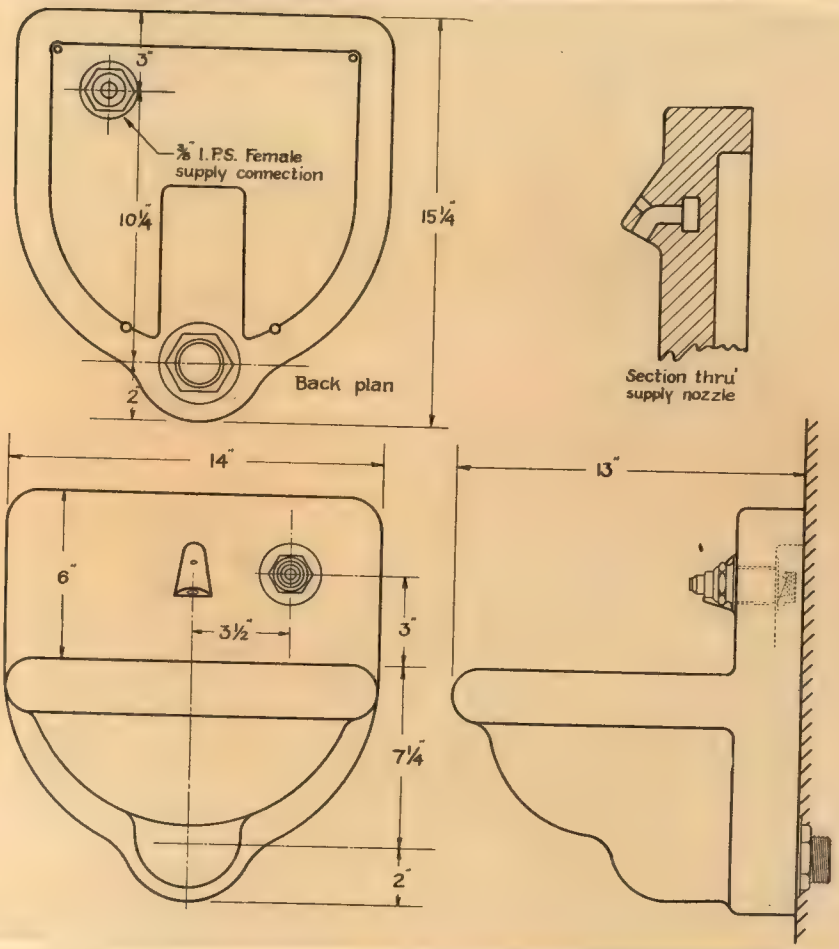

K-2419 Roughing Measurements

Measurements may vary from ¼ to ½ inch

K-2419 A

Same as **K-2419** except that the supply nozzle is arranged for use as a drinking fountain.

MADSAVE K-2440

White Vitreous China Round Front Space-saving Lavatory with 5-inch Integral Back and Concealed Hanger

SPECIFICATION:

White Vitreous China Round Front Space-saving Lavatory with 5-inch Integral Back; Size 15x24 inches, with Bowl 6½ inches deep, Hooded Overflow, Anti-splash Rim and Concealed Hanger. Fitted with N. P. Brass Compression Faucets with China Indexed Handles, N. P. Brass Plug and Chain with Rubber Stopper, 1¼-inch N. P. Brass "P" Trap to wall with China Escutcheon and ⅜-inch N. P. Brass Supply Pipes to wall with Loose Key Stop Valves and China Wall Escutcheons.

DIMENSIONS:

Lavatory, inches	15x24
Approximate weight, packed, Lavatory and Hanger, pounds	93

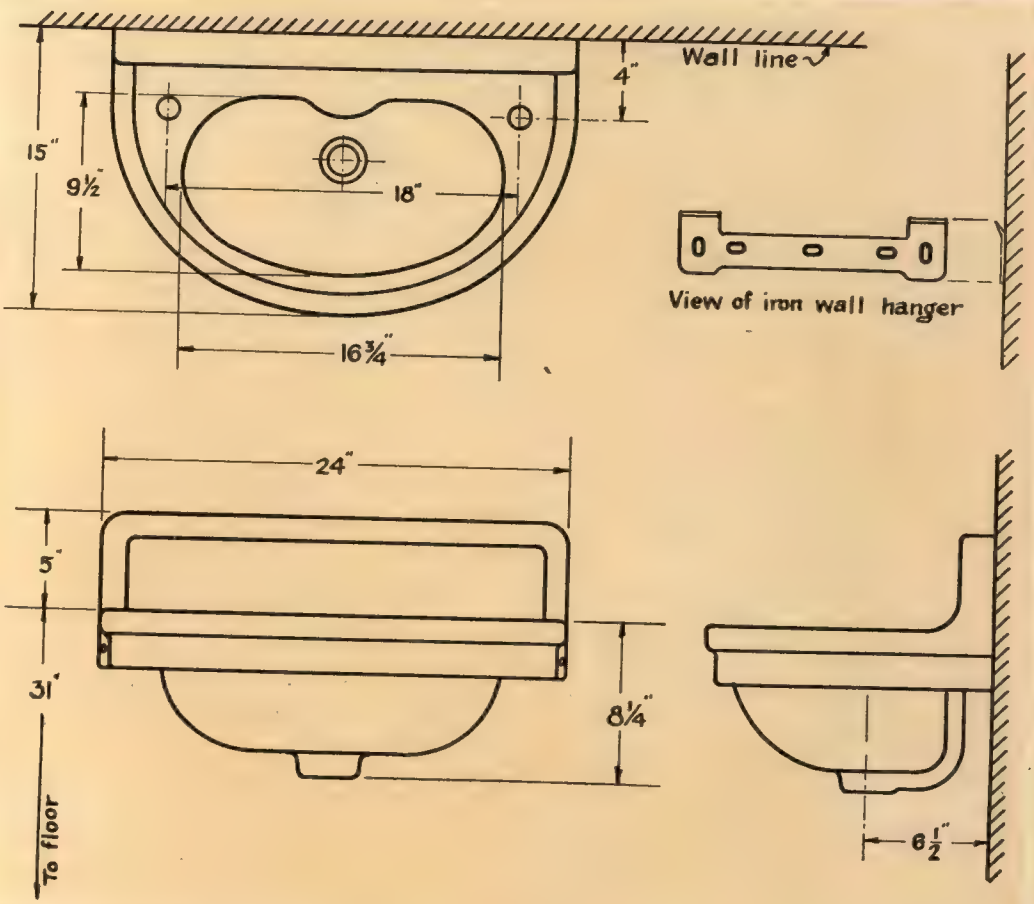

K-2440 Roughing Measurements

Measurements may vary from ¼ to ½ inch

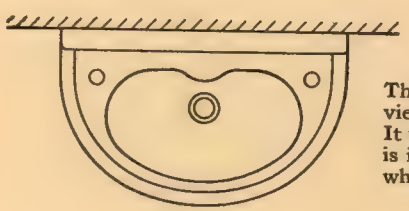

This illustration shows the top view of the Madsave Lavatory. It will be seen that this lavatory is ideal for installation in rooms where the space is limited.

MADENTA K-2451

White Vitreous China Straight Front Integral Supply Nozzle Dental Lavatory with 5-inch Integral Back and Concealed Hangers

SPECIFICATION:

White Vitreous China Straight Front Dental Lavatory with 5-inch Integral Back; Size 13x14 inches, with Bowl 5 inches deep, Integral Supply Nozzle and Concealed Hangers. Fitted with Compression Supply Valves with All-china Cross-arm Handles and Escutcheons, Integral China Grid with N. P. Brass Plug for continuous flow, 1¼-inch N. P. Brass "P" Trap to wall with China Escutcheon and ⅜-inch N. P. Brass Supply Pipes to wall with China Handle Stop Valves and China Wall Escutcheons.

DIMENSIONS:

Lavatory, inches	13x14
Approximate weight, packed complete, pounds	65

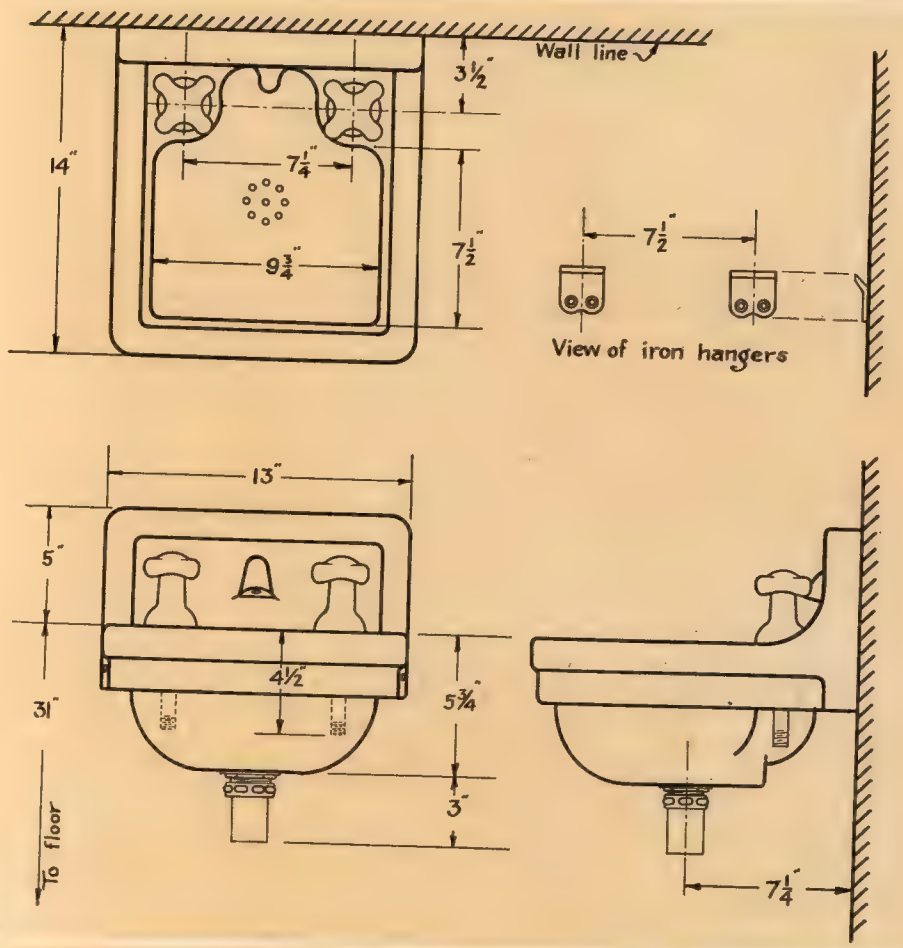

K-2451 Roughing Measurements

Measurements may vary from ¼ to ½ inch

No bathroom is complete without a dental lavatory. The use of this fixture eliminates the necessity of cleaning the teeth in the regular lavatory which is a very unsanitary practice.

LAVATORY FITTINGS

K-2600

N. P. Brass Combination Supply and Pop-up Waste Fixture with China Knob, Compression Supply Valves with China Cross-arm Handles and Escutcheons. Waste is furnished with 1¼-inch O. D. Tail Piece. Valves are threaded for ¼-inch iron pipe, male.

K-2605

1¼-inch N. P. Brass Plug with N. P. Chainstay, Chain and Rubber Stopper.

K-2610

1¼-inch N. P. Brass Plug with Vitreous China Chainstay, Chain and Rubber Stopper.

K-2615

N. P. Brass Pop-up Waste with China Knob and Escutcheon. Waste is furnished with 1¼-inch O. D. Tail Piece.

LAVATORY FITTINGS

K-2620

N. P. Brass Compression Lavatory Faucet with China Cross-arm Handle. Tail Piece threaded for ¼-inch iron pipe, male.

K-2626

N. P. Brass Self-closing Lavatory Faucet with China Indexed Handle. Tail Piece threaded for ¼-inch iron pipe, male.

K-2628

N. P. Brass Push Button Self-closing Lavatory Faucet with China Index. Tail Piece threaded for ¼-inch iron pipe, male.

K-2629

N. P. Brass Compression Lavatory Faucet with China Indexed Handle. Tail Piece threaded for ¼-inch iron pipe, male.

K-2630

N. P. Brass Quick Compression Lavatory Faucet with China Handle. Tail Piece threaded for ¼-inch iron pipe, male.

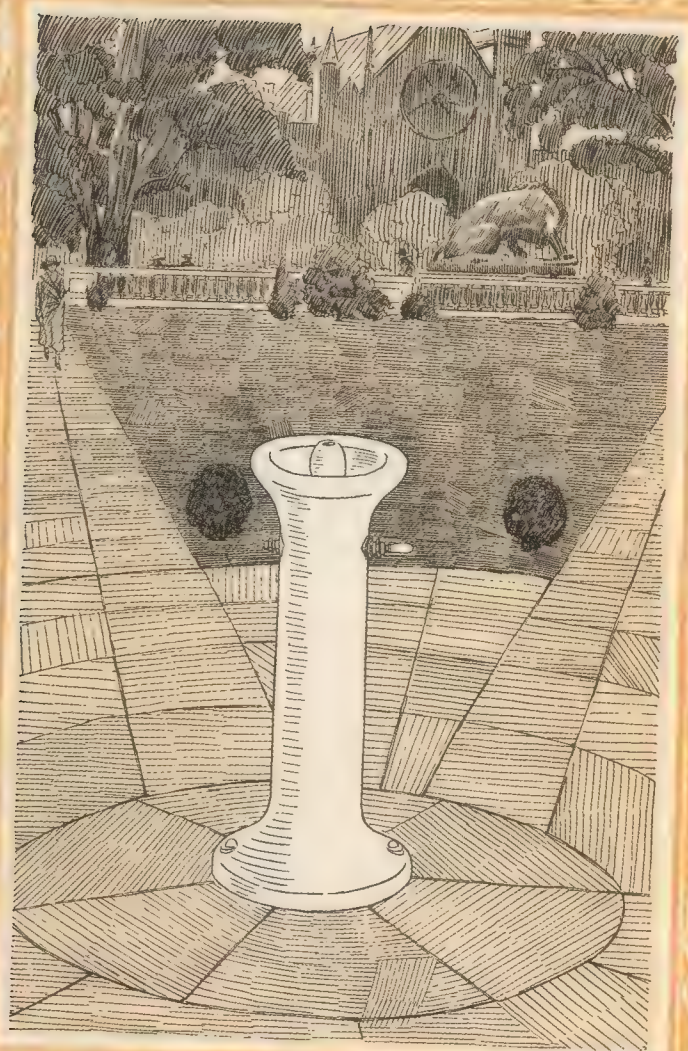

If ~~not~~ fittings not available at Trenton - It may be that they could be secured from Fidel-Huber Co. ~~123 N. Sangamon St Chicago Ill~~ → 612 N. Michigan Ave. Chicago Ill.

E608 Wall Hanging Drk Ftn = no complete Sp Valve assemblies

Also Edwardsville Brass Co. of Edwardsville, Ill

THOMAS MADDOCK

Vitreous China DRINKING FOUNTAINS

The highest expression of utility, service and sanitation

MADORIAN K-2800

White Vitreous China Pedestal Drinking Fountain

SPECIFICATION:

White Vitreous China Pedestal Drinking Fountain; Height 30 inches, with Vitreous China Bubbling Cup. Fitted with ⅜-inch Supply Pipe to floor with Self-closing China Oscillating Handle and Loose Key Stop Valve and 1¼-inch Waste Pipe to floor inside of Fountain.

DIMENSIONS:

Height, inches	30
Approximate weight, packed, Fountain, including fittings, pounds	105

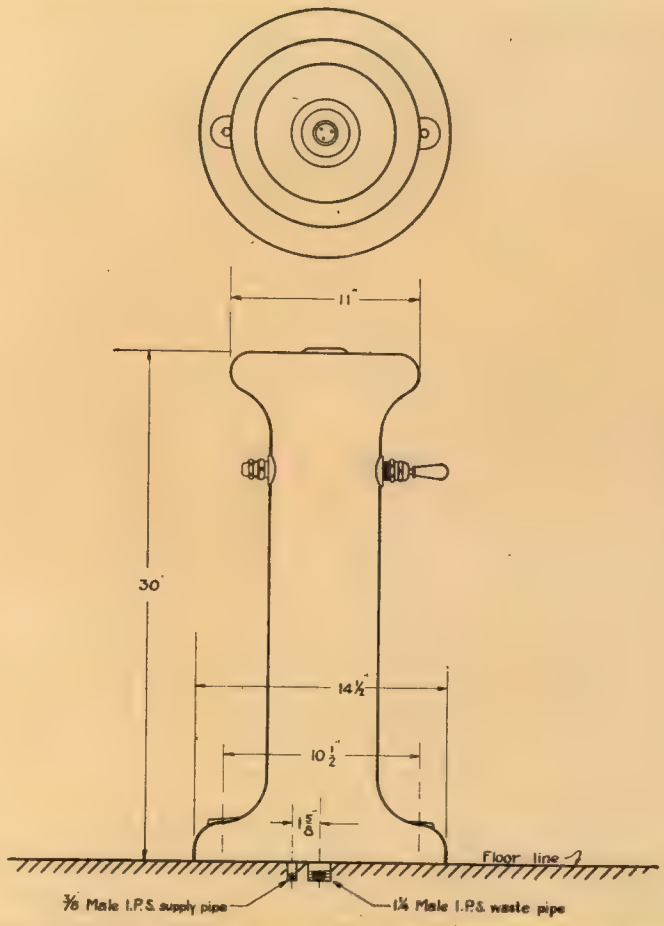

K-2800 Roughing Measurements

Measurements may vary from ¼ to ½ inch

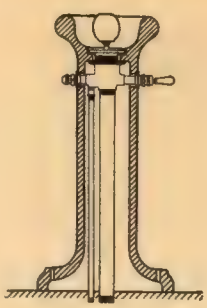

This illustration shows how the supply and waste fittings of the Madorian fountain are concealed in the earthenware.

MADOLA K-2806

White Vitreous China Wall Hanging
Drinking Fountain

SPECIFICATION:

White Vitreous China Wall Hanging Drinking Fountain with Vitreous China Bubbling Cup and Integral Housing for Fittings. Fitted with ¼-inch Supply to wall with Self-closing China Oscillating Handle and Loose Key Stop Valve and 1¼-inch Waste Fixture with Trap.

Approximate weight, packed, Fountain, including fittings, pounds 58

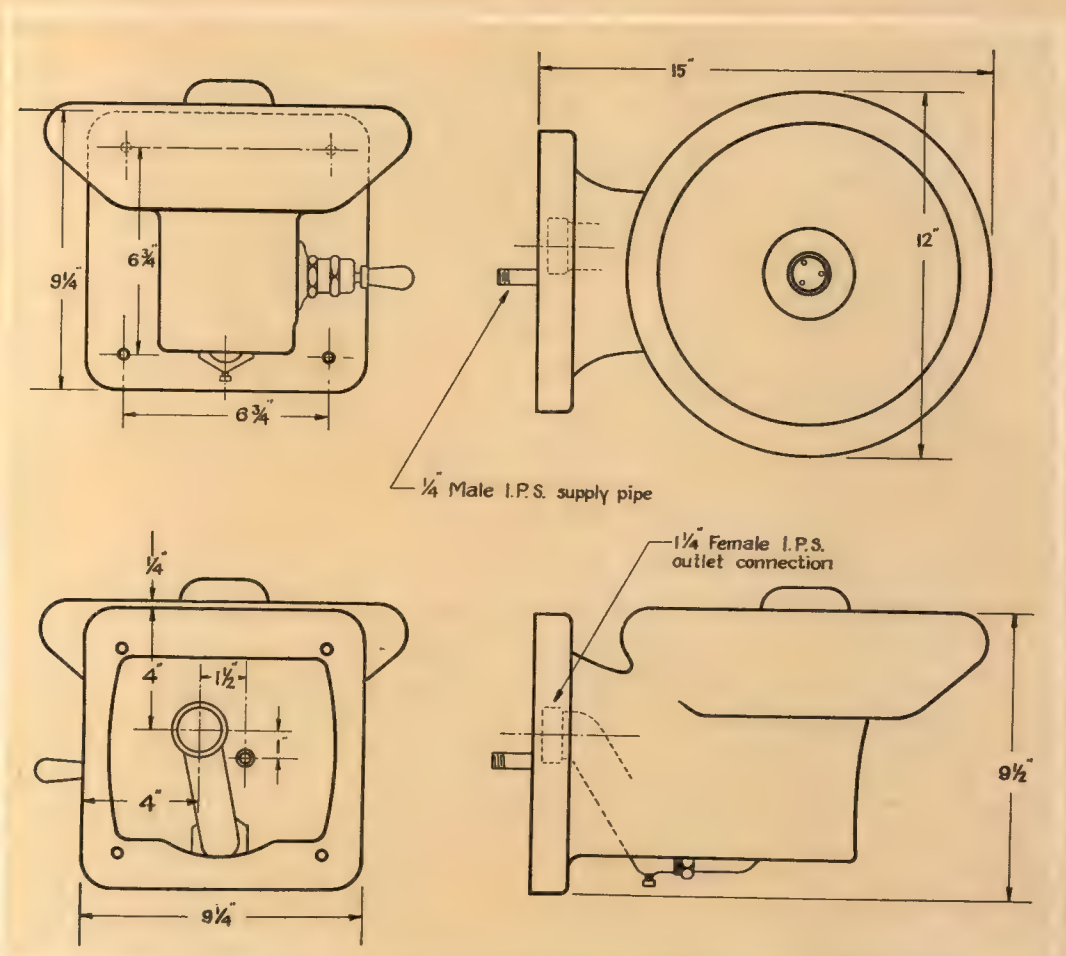

K-2806 Roughing Measurements

Measurements may vary from ¼ to ½ inch

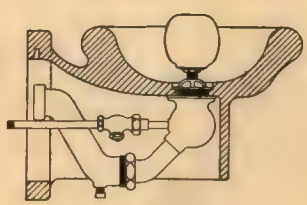

This illustration shows how the supply and waste fittings of the Madola fountain are concealed in the earthenware.

MADANGLO K-2810

White Vitreous China Straight Front Wall Hanging Drinking Fountain with Integral Back

SPECIFICATION:

White Vitreous China Straight Front Wall Hanging Drinking Fountain with 7¾-inch Integral Back; Size 12¾x18 inches, with Concealed Hangers. Fitted with ⅜-inch N. P. Brass Self-closing Push Button Faucet with Controlling Stop, China Bubbling Cup, ⅜-inch N. P. Brass Supply Pipe with Self-closing China Oscillating Handle and Loose Key Stop Valve and 1¼-inch N. P. Brass "P" Trap to wall with N. P. Escutcheon.

DIMENSIONS:

Fountain, inches	12¾ x 18
Approximate weight, packed, Fountain only, pounds	65
Fountain, including fittings, pounds	70

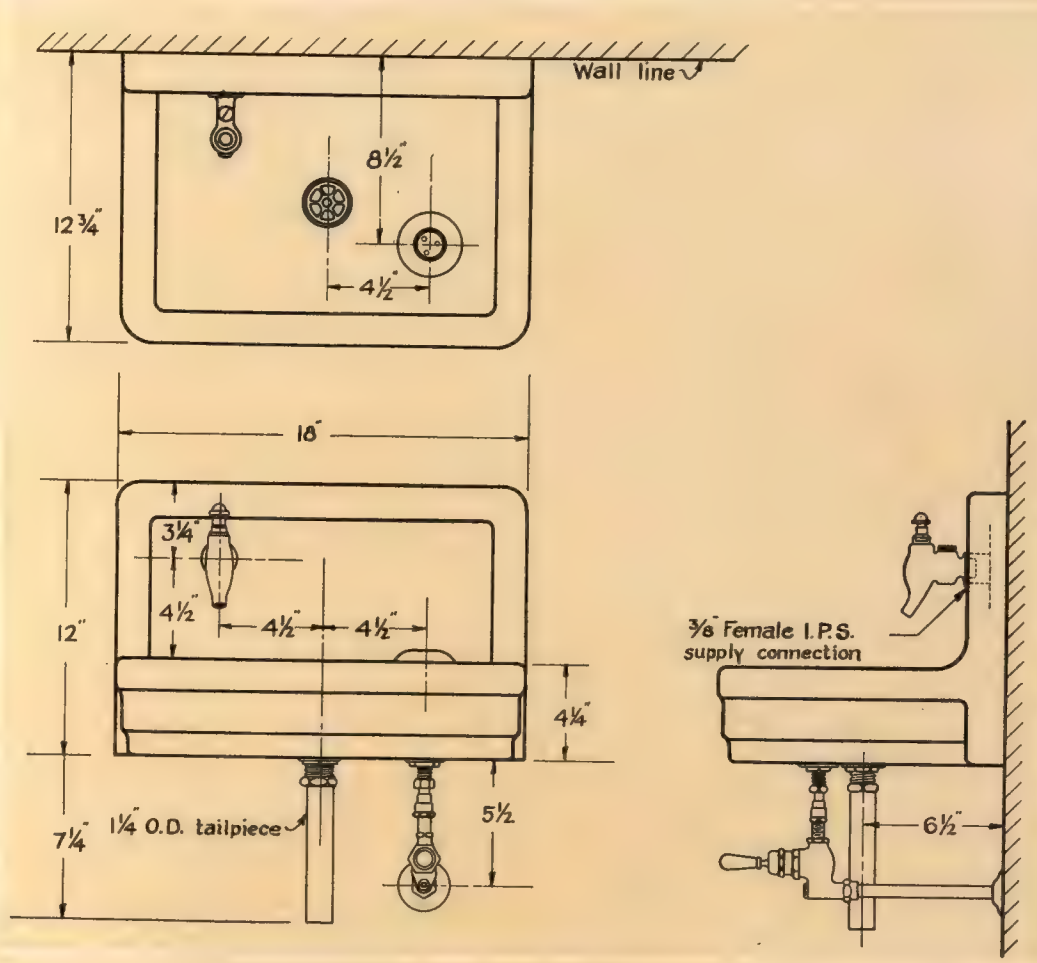

K-2810 Roughing Measurements

Measurements may vary from ¼ to ½ inch

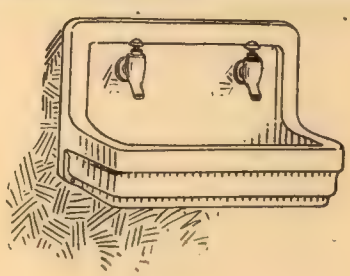

K-2810 A

Same as K-2810 except with two faucets and no bubbling cup

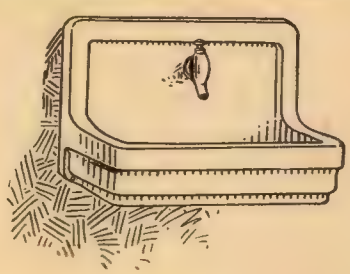

K-2810 B

Same as K-2810 except with one faucet in the centre and no bubbling cup

THOMAS MADDOCK

Vitreous China BIDETS

The fixture that completes the modern bathroom

The importance of the Bidet in the modern bathroom

THE Bidet (pronounced Be-DAY) is an important sanitary fixture which has not been used extensively in this country due to the lack of knowledge of its health protecting features. For years it has been in common use in Europe and all Latin-American countries. Through ignorance of its advantages many regard the bidet as a fixture to be used for birth-control. This is obviously incorrect because a plain water douche cannot accomplish this purpose.

The bidet fixture is an appliance designed to maintain for the user a constant state of cleanliness of the private parts. It is made entirely of white vitreous china, is 14½ inches in width and has a height of 15 inches from the top of the rim to the floor.

It is equipped with hot and cold supply valves and a pop-up waste to retain water in the bowl or to drain it when desired. The inside walls of the bowl are washed by a flushing rim on the same principle as the watercloset, although the bidet is not designed nor intended to carry off human waste matter.

The bidet is also provided with an integral douche or jet, operated when desired by means of a transfer valve which directs a stream or column of water upward from the bottom of the bowl. (See cross-section illustration on page 93.)

This douche is formed by a cluster of small holes so arranged as to direct the water to one central point, thereby forming a solid stream. In the earlier models of bidets the douche was made of brass in the form of a nozzle to which a rubber tube with a syringe appliance might be attached for women's use. The use of the bidet as a syringe was a dangerous practice, however, as uniform temperature of the water could not be assured while the douche was in use. Turning on the cold water in another part of the house was likely to raise the temperature of the douche, and burning or scalding sometimes resulted.

The brass nozzle douche was also objectionable because the user would strike it with the fingers while washing.

After a bowel movement it is impossible to cleanse the anus with dry paper. This practice, the medical fraternity tells us, is respon-

sible for a large proportion of the existing cases of hemorrhoids or piles. The use of the bidet does much to eliminate the possibility of developing hemorrhoids or piles, and is also recommended for their treatment. After each passage, the anus actually should be washed with water. (The bidet is usually installed alongside of the watercloset.)

With women, the bidet should be an indispensable bathroom fixture, because proper attention to health requires bathing of the genital organs more frequently than can be accomplished conveniently with the bath tub. It is essential and conducive to good health to wash these parts twice daily.

This use for the bidet is also essential for men, because the ordinary tub or shower bath is not sufficient to secure a similar degree of cleanliness. As with women, men too should bathe these parts twice each day.

Women will find the bidet a very important and convenient fixture for use during their menstruating period. The genital organs should always be thoroughly cleansed when changing the sanitary pad, and the bidet is the proper fixture for this use. The bidet is particularly desirable in manufacturing plants where a number of women are employed or in department stores, women's colleges and other institutions.

Another important use of the bidet is that of a foot bath. As it is 15 inches high from the floor to the top of the rim, it can be used very comfortably as a foot bath. When the waste plug is closed the bidet will hold about 3 inches of water. There will be no hesitancy about using the bidet as a foot bath after it has been used for bathing other parts because, being made of pure white vitreous china and having a flushing rim, it can be kept spotlessly clean and sanitary by simply rinsing with water or wiping with a damp cloth. It cannot tarnish or discolor.

The private parts may be washed by the bidet with or without the use of the douche. By closing the pop-up waste the bowl may be filled and the washing done with the hand. After this the parts may be rinsed by using the douche. If preferred the entire washing may be done with the douche.

In using the bidet it is not necessary to undress. The clothing is in the same position as when using the watercloset.

The use of the bidet is a clean habit and when once acquired it becomes an important part of the sanitary precautions of our daily life. Its importance in promoting better health can hardly be overestimated.

MADELTA K-2828

White Vitreous China Flushing Rim Pedestal Bidet

SPECIFICATION:

White Vitreous China Flushing Rim Pedestal Bidet; Height 15 inches, Opening of Bowl 10x16 inches. Fitted with two Compression Supply Valves with All-china Cross-arm Handles and Escutcheons supplying hot and cold water to Flushing Rim; Pop-up Waste with All-china Knob and Escutcheon and 1¼-inch O. D. Tail Piece and ⅜-inch N. P. Brass Supply Pipes to floor with China Floor Escutcheons.

Approximate weight, packed complete, pounds 85

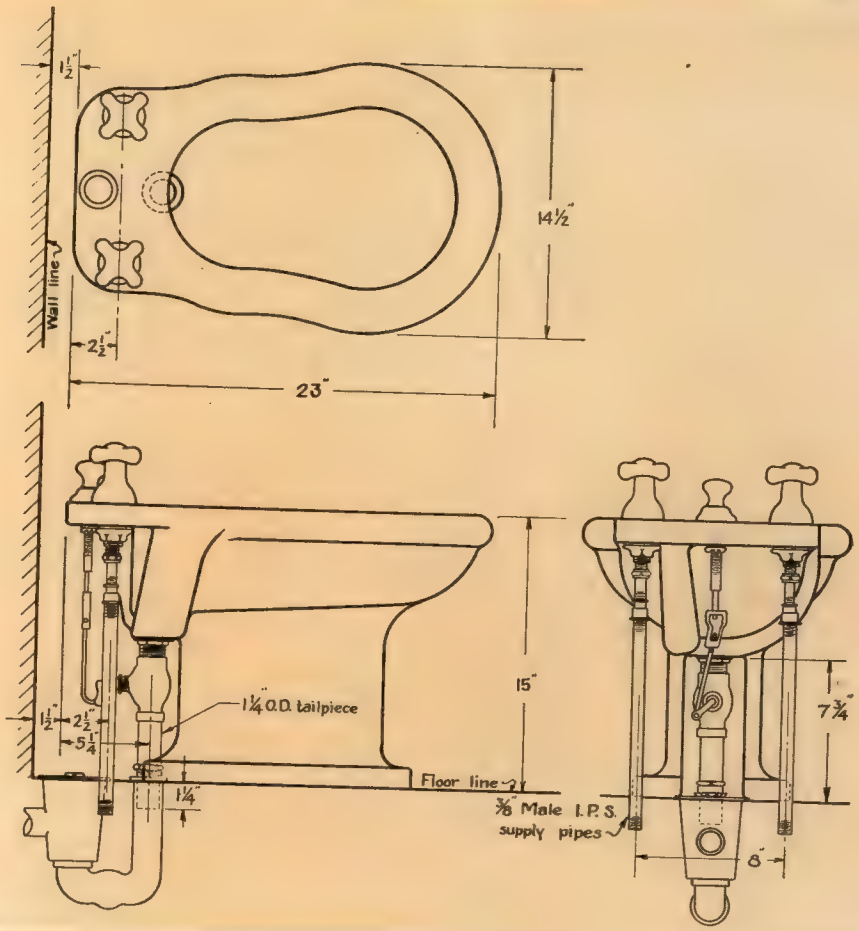

K-2828 Roughing Measurements

Measurements may vary from ¼ to ½ inch

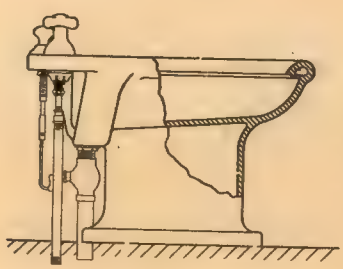

The Madelta bidet is equipped with valves for supplying hot and cold water to the flushing rim only. It has a pop-up waste to retain the water in the bowl when desired.

MADET K-2829

White Vitreous China Flushing Rim Pedestal Bidet with Douche

SPECIFICATION:

White Vitreous China Flushing Rim Pedestal Bidet with Douche; Height 15 inches, Opening of Bowl 10x16 inches. Fitted with four Compression Supply Valves with All-china Cross-arm Handles and Escutcheons supplying hot and cold water to Flushing Rim and Centre Douche, Pop-up Waste with All-china Knob and Escutcheon and 1¼-inch O. D. Tail Piece and ⅜-inch N. P. Brass Supply Pipes to floor with China Floor Escutcheons.

Approximate weight, packed complete, pounds 90

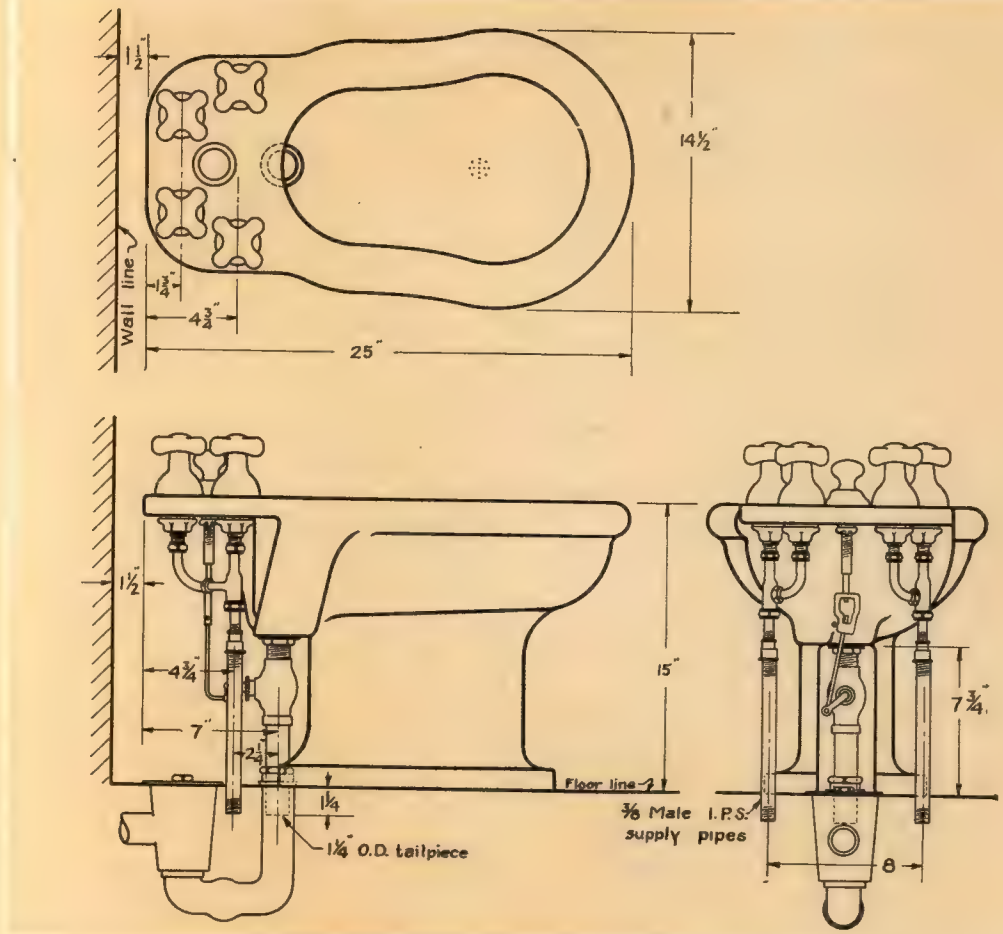

K-2829 Roughing Measurements

Measurements may vary from ¼ to ½ inch

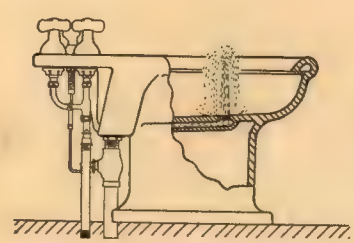

The Madet bidet is equipped with valves for supplying both hot and cold water to the flushing rim and centre douche. It has a pop-up waste to retain the water in the bowl when desired.

MADUN K-2830

White Vitreous China Flushing Rim Pedestal Bidet with Douche (For Cold Water Only)

SPECIFICATION:

White Vitreous China Flushing Rim Pedestal Bidet with Douche; Height 15 inches, Opening of Bowl 10x16 inches. Fitted with two Compression Supply Valves with All-china Cross-arm Handles and Escutcheons supplying cold water to Flushing Rim and Centre Douche, Pop-up Waste with All-china Knob and Escutcheon and 1¼-inch O. D. Tail Piece and ⅜-inch N. P. Brass Supply Pipes to floor with China Floor Escutcheons.

Approximate weight, packed complete, pounds 85

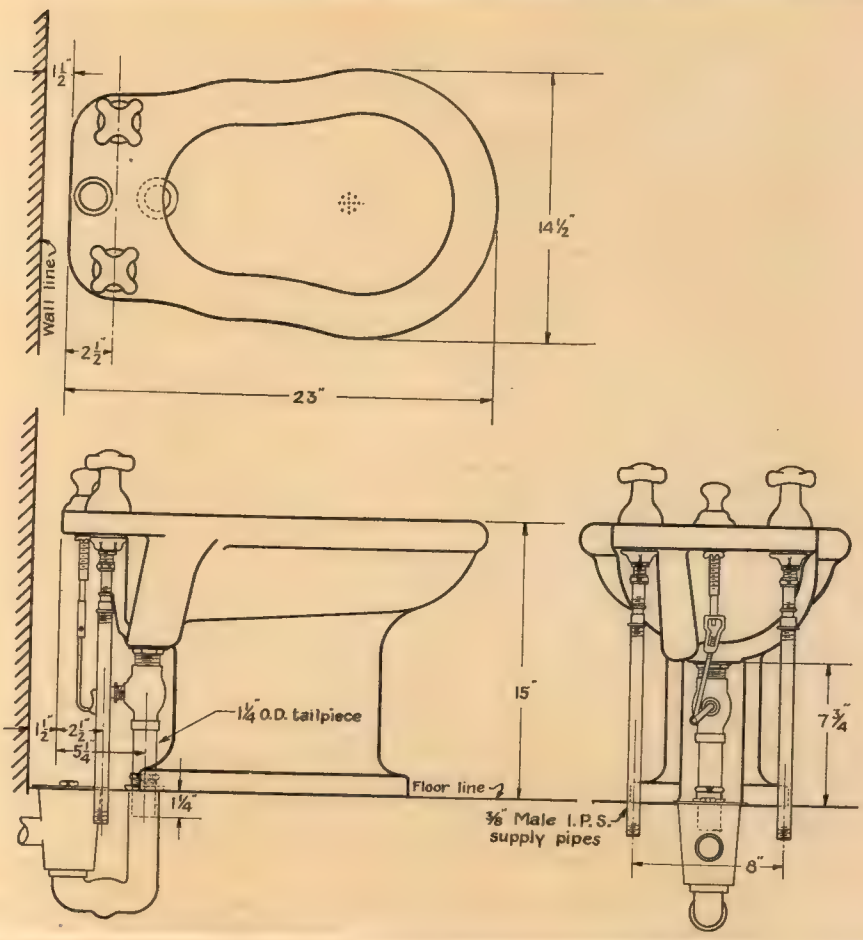

K-2830 Roughing Measurements

Measurements may vary from ¼ to ½ inch

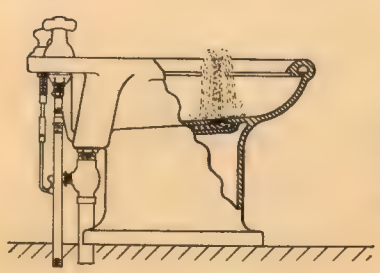

The Madun bidet is equipped with valves for supplying cold water only to either the flushing rim or centre douche. It has a pop-up waste to retain the water in the bowl when desired.

THOS. MADDOCK'S SONS CO. TRENTON, N.J.

MADVAL K-2831

White Vitreous China Flushing Rim
Pedestal Bidet with Douche

SPECIFICATION:

White Vitreous China Flushing Rim Pedestal Bidet with Douche; Height 15 inches, Opening of Bowl 10x16 inches. Fitted with two Compression Supply Valves with All-china Cross-arm Handles and Escutcheons and Transfer Valve with All-china Lever Handle and Escutcheon, supplying hot and cold water to either Flushing Rim or Centre Douche; Pop-up Waste with All-china Knob and Escutcheon and 1¼-inch O. D. Tail Piece and ⅜-inch N. P. Brass Supply Pipes to floor with China Floor Escutcheons.

Approximate weight, packed complete, pounds 92

MADET K-2840

MADET K-2840A

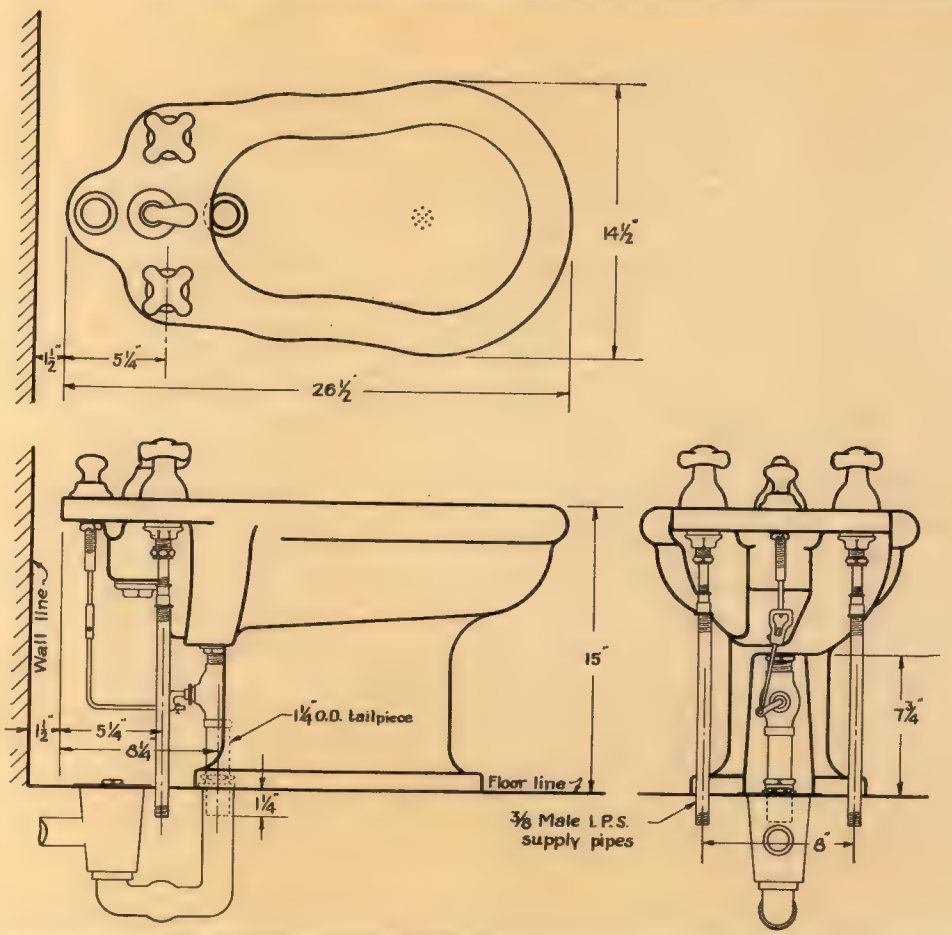

K-2831 Roughing Measurements

Measurements may vary from ¼ to ½ inch

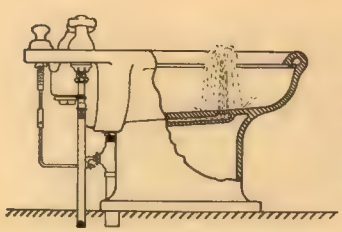

The Madval bidet is equipped with a transfer valve for supplying both hot and cold water to either the flushing rim or centre douche. It has a pop-up waste to retain the water in the bowl when desired.

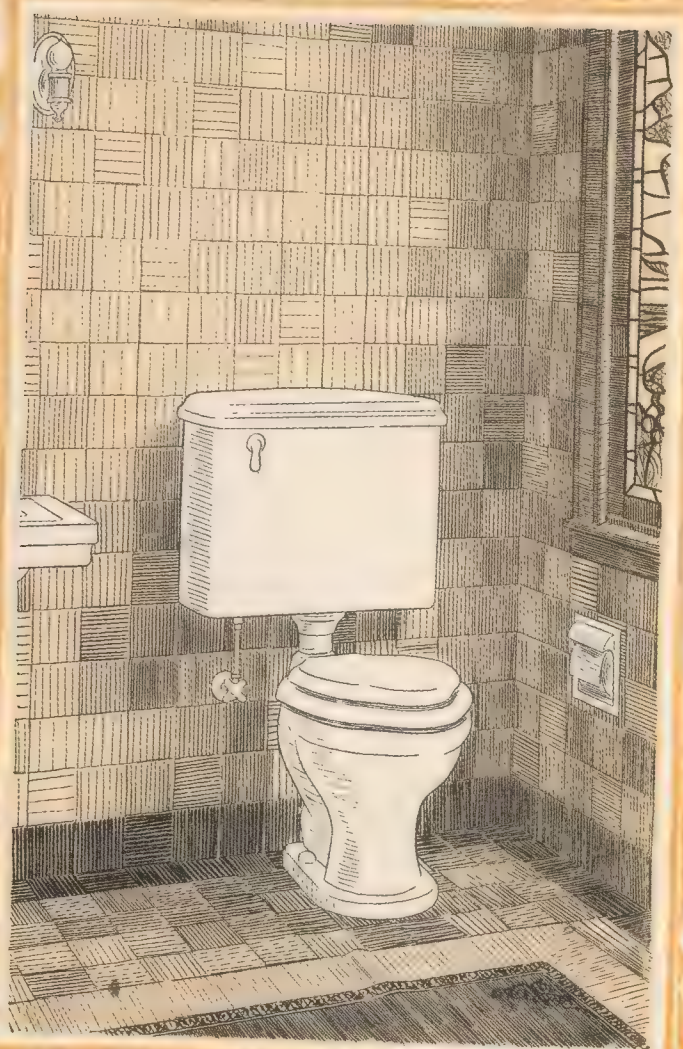

THOMAS MADDOCK

Vitreous China CLOSETS

The utmost in bathroom sanitation

The evolution and development of the Water Closet

THE most important fixture of all sanitary appliances is probably the water closet. The designers of this fixture have attained a very high standard of efficiency considering the difficult function this device has to perform. To make a water closet that will carry off human waste, that will be self-cleansing, sanitary, non-soiling and at the same time noiseless in operation, has been no small task to accomplish.

The first use of water closets dates back to about 1850, when the city of London compelled house owners to connect with the sewer. However, as early as A. D. 100 the Roman Emperor, Nerva Augustus, commissioned the military engineer Frontinus to prepare a report of the conditions of the water supply of Rome with particular reference to sanitation. This report is interesting as it shows a very liberal use of water and tends to confirm the impression that the troughs or depressions afterwards found in the Roman baths were used for the purpose of carrying off fæcal matter.

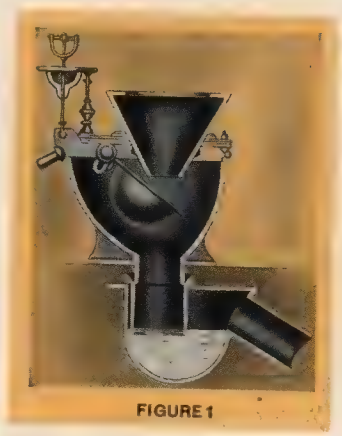

FIGURE 1

The first real water closet was that known as the pan closet (figure 1) which was in general use until about 1865 when it was displaced by the valve closet (figure 2). This latter type was a marked improvement over the pan closet but it was far from being a sanitary fixture.

The succeeding steps seem to have been taken by the potter, and rightfully so because it was soon demonstrated that water closets made of any material other than earthenware would not be strictly sanitary. Consequently the inventor found it necessary to confine his improvements to a point where it was possible for the potter to reproduce his idea in clay.

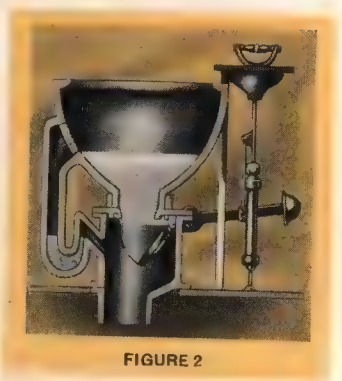

FIGURE 2

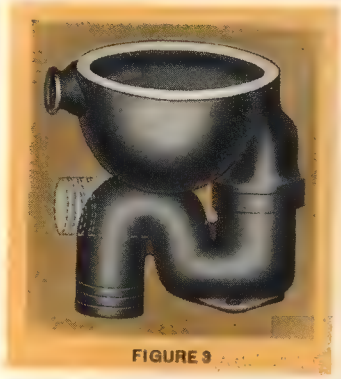

FIGURE 3

The next development was the production of the washout closet about 1875 (figure 3). This was the first type of all-earthenware water closet and was originally made in two pieces, the trap and bowl being fastened together. Later the potter was able to produce the washout in one piece, and this was a marked advance in the art of sanitary pottery. This closet remained in general use until about the year 1900 when the washdown type (figure 4) began to take its place. Today practically every plumbing ordinance prevents the use of washout closets.

As early as the year 1880, Wm. Smith, of California, patented a jet closet (figure 5) the development of which was slow because of the difficulties it presented to the potter. Later by combining the syphonic principle (a feature which the Smith closet did not have) with the jet, the syphon jet principle of operation was perfected about 1895.

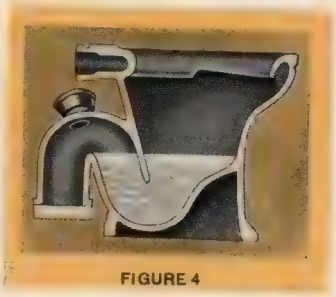

FIGURE 4

The wall-hanging type of closet was first introduced in this country by E. G. Watrous in about 1905.

FIGURE 5

The bowl of this closet was emptied by what is commonly known today as the blow-out principle and, in operation, was quite similar to the Smith closet. While this closet has had some sale for public and semi-public places, there are comparatively few of them now in use. The method of installing them is expensive and the blow-out pattern is noisy in operation.

The washdown and syphon jet are the types now in general use. These types have supplanted all others with the exception of the reversed trap which is a recent development. This latter is a combination of the washdown and syphon jet having the action of the former and an appearance similar to the latter.

During all the time in which new principles of operation were being developed the potter had many difficulties to overcome. As the design and mechanical operation improved, a better basic product was necessary if the water closet was to be made an absolutely sanitary fixture. Originally water closets were made of a soft, porous body which would craze and absorb liquid. The fixture under these conditions soon became offensive. The demand naturally was for a material which would not absorb—one that would be vitreous, with a hard, smooth surface that would not craze. This presented a big problem to the sanitary potter, for while china having these properties was being made, it was no small accomplishment to make the large sanitary pieces of this material. And it is actually of china that water closets are made today by the better manufacturers.

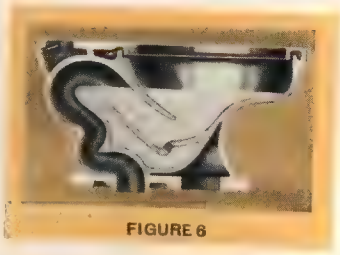

FIGURE 6

FIGURE 7

Recent years have witnessed the many improvements that have made the water closet the sanitary fixture it is today. The non-soiling feature is one which has been given very careful thought by the designers. This has resulted in the extended front bowl and cut back rim at the rear of the bowl, two improvements very necessary to prevent soiling. The thin rim which gives a minimum of unwashed surface inside the bowl practically eliminates the possibility of soiling above the flushing point. (Note figures 6 and 7 which illustrate these features.)

A comparison of the three types of bowls now on the market will best illustrate the superiority of the syphon jet as compared with either the washdown (figures 10 and 11) or reversed trap (figures 8 and 9). Compared with a syphon jet (figures 6 and 7), the washdown and reversed trap have a very small surface of water. This allows much more fouling space inside the bowl.

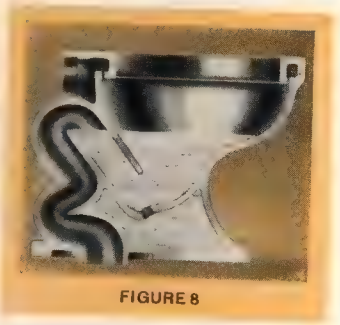

FIGURE 8

FIGURE 9

The washdown, while positive in action, does its work in a very clumsy way. When the tank or valve is operated, the water in the bowl raises and the contents of the bowl is churned around before syphonic action is started. This objection cannot be overcome in the washdown or reversed trap types because of the construction. However, the action is improved by the addition of the jet. These bowls are noisy in operation and do not have as large an opening through the trap.

Figures 6 and 7 illustrate a syphon jet showing the larger water surface and large trap opening. The operation of the syphon jet is very much superior to that of the washdown or reverse trap. Immediately the tank or flush valve is operated, the jet causes the syphonic action to start. The contents of the bowl enter the up leg as the rim wash starts. Consequently, the bowl is emptied quietly and without the churning effect produced in either the washdown or reversed trap.

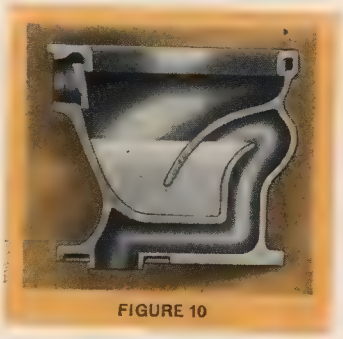

FIGURE 10

The syphon jet is the only style of water closet on which a noiseless feature can be attached. It should be remembered that if a really quiet acting closet is wanted, it must be operated by a low pattern vitreous china tank and not by a flush valve.

FIGURE 11

While the silent feature reduces the noise when the valve is used, the closet will not work as quietly on a valve as it will under a low pattern vitreous china tank.

The most modern water closet of today is the Ariston-Madera Silent, a syphon jet that combines large water surface, extended front and cut back rim bowl, thin non-soiling rim and silent feature.

DISCONTINUED

ARISTON-MADERA SILENT K-2900

White Vitreous China Non-soiling Silent Action Syphon Jet Closet; Top Inlet, Floor Outlet with K-3112 Tank

SPECIFICATION:

White Vitreous China Non-soiling Silent Action Syphon Jet Closet with Extended Top Inlet, Floor Outlet, 2-inch Brass Spud, Extended Front Bowl and Cut-back Rim flushed all the way around. Height 14½ inches, Opening of Bowl 10x16 inches, Water Surface 10x14 inches, Sanitary Rim with 1¼-inch downward projection inside of Bowl and 3-inch Water Seal. White Celluloid-covered Seat and Cover, open front and back, with heavy White Covered Brass Bar Hinge. One-piece White Vitreous China Flush Pipe Cover and White Vitreous China Bolt Caps. K-3112 White Vitreous China Tank, fitted with N. P. Brass Flush Connection, Under-pull lever with China Handle, Silent Acting Ball Cock, Extra Heavy Flush Valve with Large Overflow and ⅜-inch I. P. Size N. P. Brass Supply Pipe to wall with China Handle Stop Valve and China Wall Escutcheon.

Approximate weight, combination packed complete in one crate, pounds 240

NOTE: This Closet is also made 13 inches high.

Seat substitutions page 186.

ARISTON SILENT K-2904

ARISTON SILENT K-2904B

ARISTON SILENT K-2904C

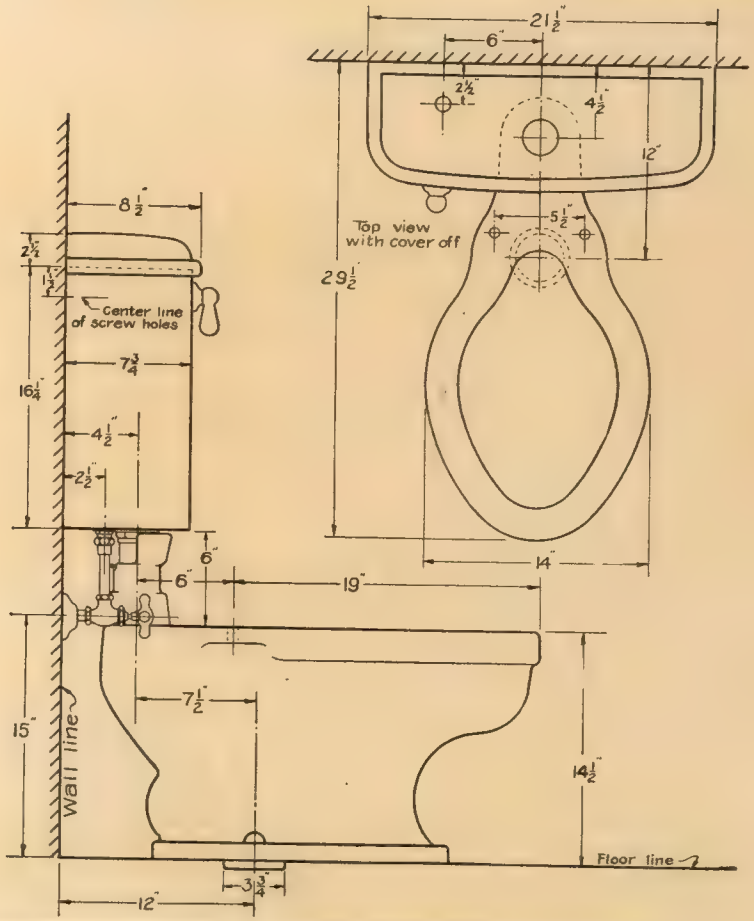

K-2904 Roughing Measurements

Measurements may vary from ¼ to ½ inch

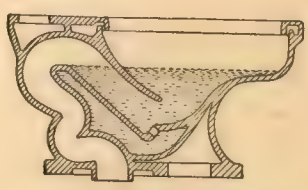

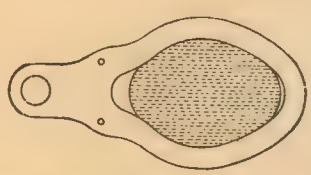

Features of the Ariston-Madera Silent Closet

Extended Front Bowl
Cut Back Rim
Silent Action Feature

Large Water Surface
Large Trap Opening
Thin Sanitary Rim

THOS. MADDOCK'S SONS CO.
TRENTON, N.J.

ARISTON-MADERA SILENT K-2905 S V

White Vitreous China Non-soiling Syphon Jet Closet; Side Inlet, Floor Outlet with Flush Valve

SPECIFICATION:

White Vitreous China Non-soiling Syphon Jet Closet with Side Inlet, Floor Outlet, 1¼- or 1½-inch Brass Spud, Extended Front Bowl and Cut-back Rim flushed all the way around. Height 14½ inches, Opening of Bowl 10x16 inches, Water Surface 10x14 inches, Sanitary Rim with 1¼-inch downward projection inside of Bowl and 3-inch Water Seal. Mahogany Finished Seat, no Cover, open front and back, with heavy N. P. Brass Bar Hinge, White Vitreous China Bolt Caps and N. P. Brass Flush Valve with China Oscillating Handle.

Approximate weight, packed, Closet only, pounds	90
Seat only, pounds	14

NOTE: This Closet is also made 13 inches high.

Seat substitutions page 186.

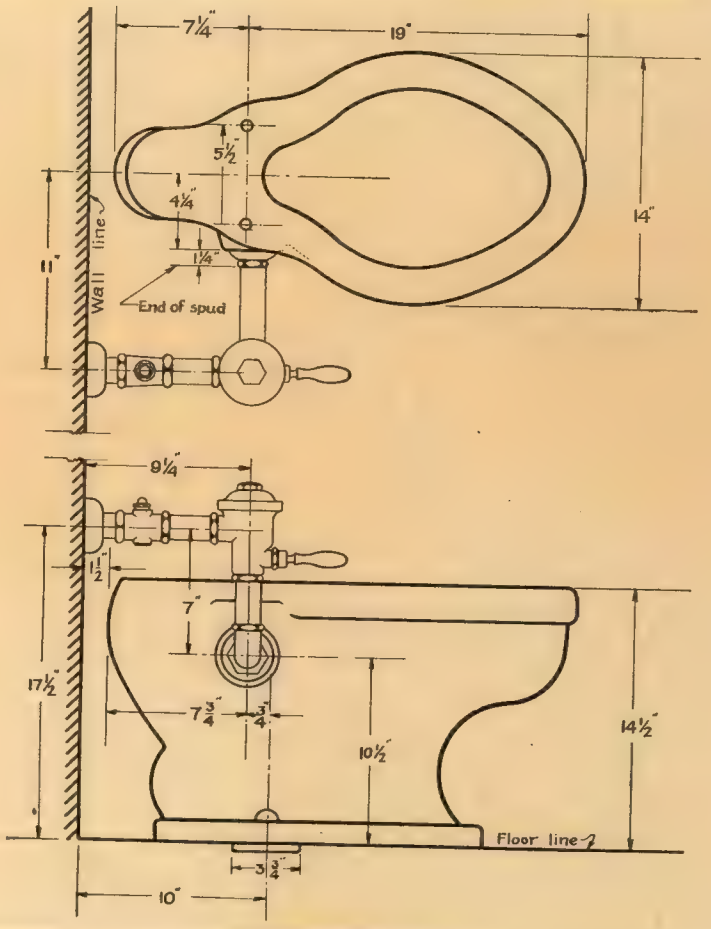

K-2905 S V Roughing Measurements

Measurements may vary from ¼ to ½ inch

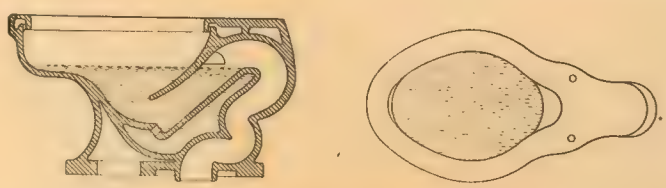

Features of the Ariston-Madera Silent Closet

Extended Front Bowl
Cut Back Rim
Large Water Surface
Large Trap Opening
Thin Sanitary Rim

THOS. MADDOCK'S SONS CO.
TRENTON, N.J.

ARISTON-MADERA SILENT K-2908 V

White Vitreous China Non-soiling Syphon Jet Closet; Top Inlet, Floor Outlet with Flush Valve

SPECIFICATION:

White Vitreous China Non-soiling Syphon Jet Closet with Extended Top Inlet, Floor Outlet, 1¼- or 1½-inch Brass Spud, Extended Front Bowl and Cut-back Rim flushed all the way around. Height 14½ inches, Opening of Bowl 10x16 inches, Water Surface 10x14 inches, Sanitary Rim with 1¼-inch downward projection inside of Bowl and 3-inch Water Seal. Mahogany Finished Seat, no Cover, open front and back, with heavy N. P. Brass Bar Hinge, White Vitreous China Bolt Caps and N. P. Brass Flush Valve with China Oscillating Handle.

Approximate weight, packed, Closet only, pounds 95
Seat only, pounds 14

NOTE: This Closet is also made 13 inches high.

Seat substitutions page 186.

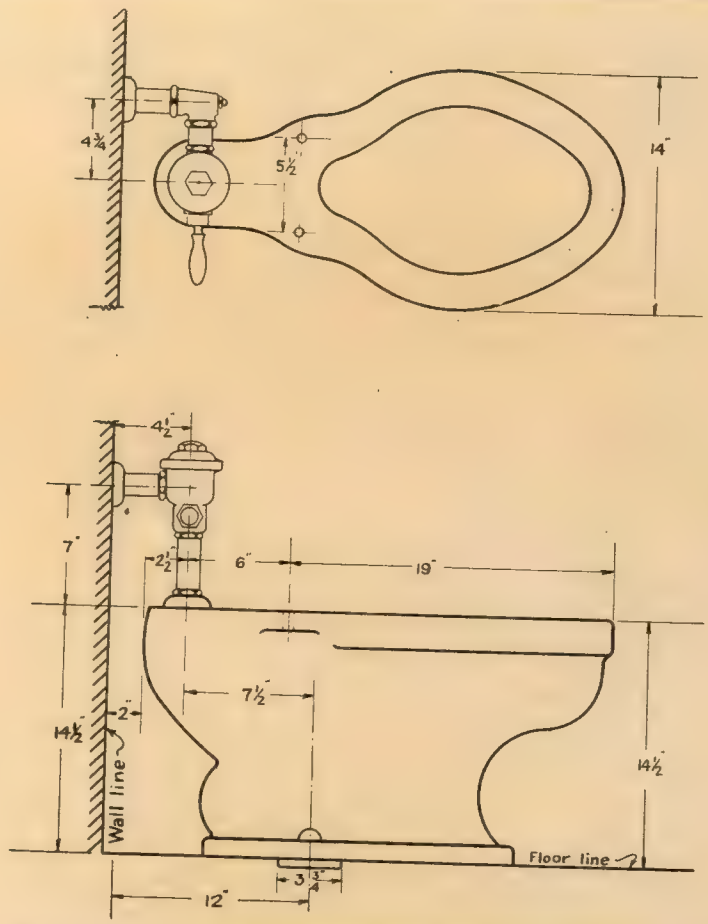

K-2908 V Roughing Measurements

Measurements may vary from ¼ to ½ inch

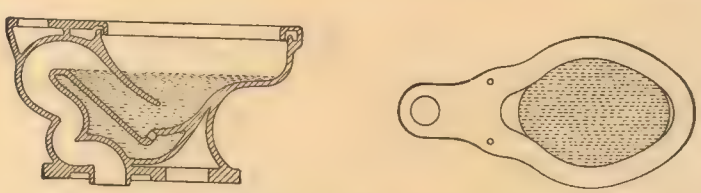

Features of the Ariston-Madera Silent Closet

Extended Front Bowl
Cut Back Rim

Large Water Surface
Large Trap Opening

Thin Sanitary Rim

ARISTON-MADERA SILENT K-2911 V

White Vitreous China Non-soiling Syphon Jet Closet; Back Inlet, Floor Outlet with Concealed Seat Action Flush Valve

SPECIFICATION:

White Vitreous China Non-soiling Syphon Jet Closet with Back Inlet, Floor Outlet, 1¼- or 1½-inch Brass Spud, Extended Front Bowl and Cut-back Rim flushed all the way around. Height 14½ inches, Opening of Bowl 10x16 inches, Water Surface 10x14 inches, Sanitary Rim with 1¼-inch downward projection inside of Bowl and 3-inch Water Seal. Mahogany Finished Seat, no Cover, open front and back, with heavy N. P. Brass Bar Hinge, White Vitreous China Bolt Caps and Concealed Seat Action Flush Valve.

Approximate weight, packed, Closet only, pounds 95
Seat only, pounds 14

NOTE: This Closet is also made 13 inches high.

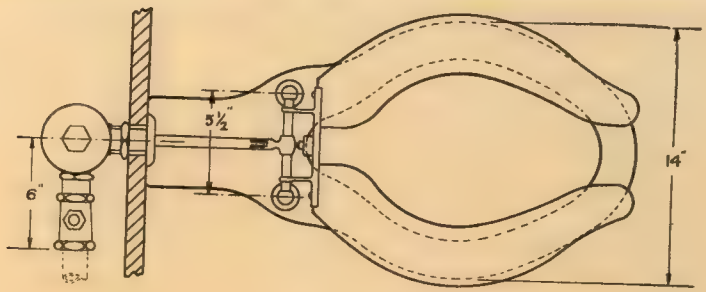

When ordering flush valve specify thickness of wall

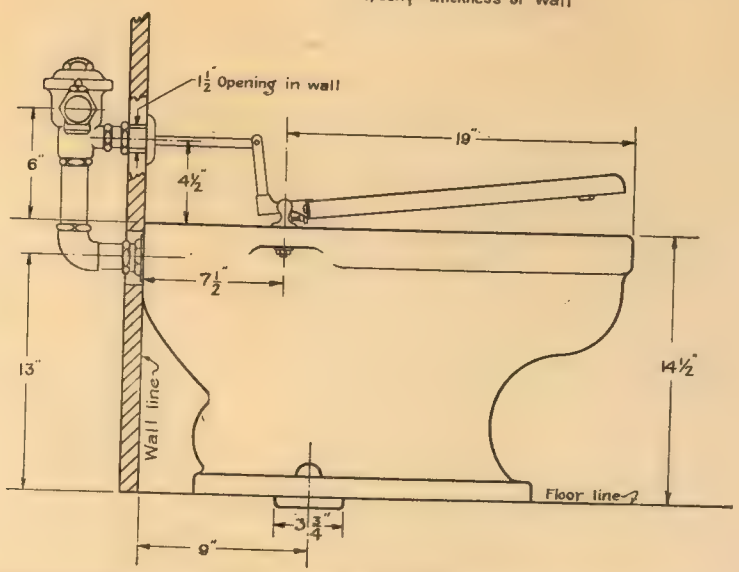

K-2911 V Roughing Measurements

Measurements may vary from ¼ to ½ inch

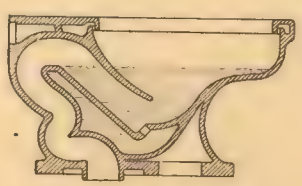

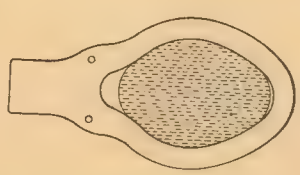

Features of the Ariston-Madera Silent Closet

Extended Front Bowl
Cut Back Rim

Large Water Surface
Large Trap Opening

Thin Sanitary Rim

ARISTON-MADERA SILENT K-2913

White Vitreous China Non-soiling Silent Action Syphon Jet Child's Closet; Top Inlet, Floor Outlet with K-3111 Tank

SPECIFICATION:

White Vitreous China Non-soiling Silent Action Syphon Jet Child's Closet with Extended Top Inlet, Floor Outlet, 2-inch Brass Spud, Extended Front Bowl and Cut-back Rim flushed all the way around. Height 10 inches, Opening of Bowl 7x10 inches, Water Surface 7x9½ inches, Sanitary Rim with 1¼-inch downward projection inside of Bowl and 2-inch Water Seal. White Celluloid-covered Seat and Cover, open front and back, with heavy White Covered Brass Bar Hinge. One-piece White Vitreous China Flush Pipe Cover and White Vitreous China Bolt Caps. K-3111 White Vitreous China Tank, fitted with N. P. Brass Flush Connection, Top Side Lever with China Handle and Escutcheon, Silent Acting Ball Cock, Extra Heavy Flush Valve with Large Overflow and ⅜-inch I. P. Size N. P. Brass Supply Pipe to wall with China Handle Stop Valve and China Wall Escutcheon.

Approximate weight, combination packed complete in one crate, pounds 160

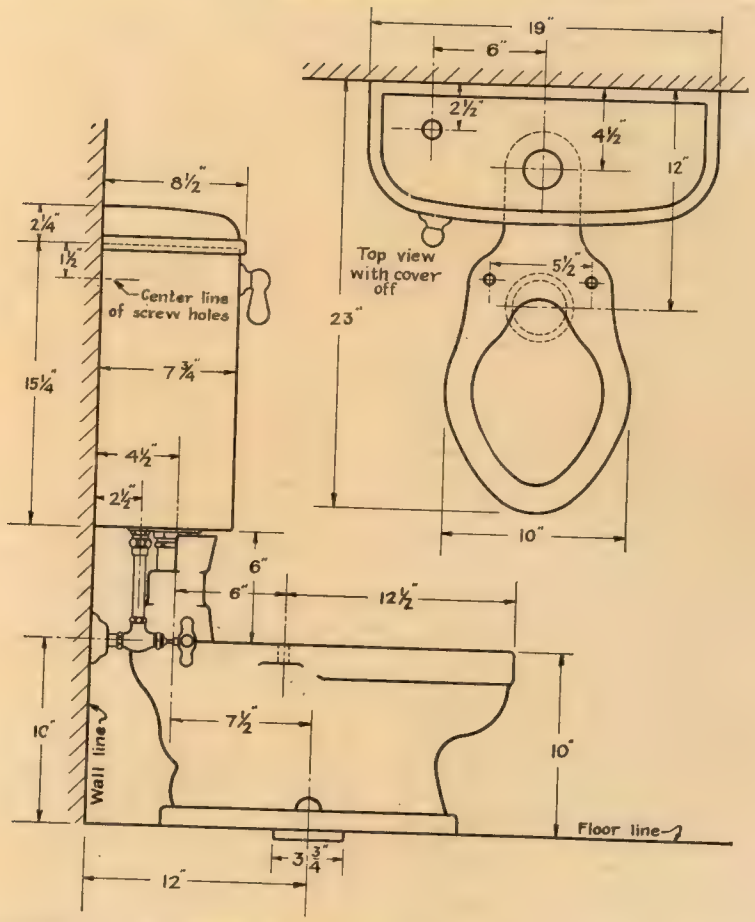

K-2913 Roughing Measurements

Measurements may vary from ¼ to ½ inch

The Ariston-Madera Silent K-2913 being 10 inches high is made especially for use by small children. It is constructed along the same lines as the regular Ariston-Madera Silent closet. It has a full trap opening and works with a strong, silent action.

DISCONTINUED

ARISTON-MADERA SILENT K-2915

White Vitreous China Non-soiling Silent Action Syphon Jet Closet with Raised Rear Vent; Top Inlet, Floor Outlet with K-3112 Tank

SPECIFICATION:

White Vitreous China Non-soiling Silent Action Syphon Jet Closet with Raised Rear Vent entirely above top of Rim, Extended Top Inlet, Floor Outlet, 2-inch Brass Spud, Extended Front Bowl and Cut-back Rim flushed all the way around. Height 14½ inches, Opening of Bowl 10x16 inches, Water Surface 10x14 inches, Sanitary Rim with 1¼-inch downward projection inside of Bowl and 3-inch Water Seal. White Celluloid-covered Seat, no Cover, open front and back, with Concealed Brass Bar Hinge. One-piece White Vitreous China Flush Pipe Cover and White Vitreous China Bolt Caps. K-3112 White Vitreous China Tank, fitted with N. P. Brass Flush Connection, Under-pull Lever with China Handle, Silent Acting Ball Cock, Extra Heavy Flush Valve with Large Overflow and ⅜-inch I. P. Size N. P. Brass Supply Pipe to wall with China Handle Stop Valve and China Wall Escutcheon.

Approximate weight, packed complete, pounds 238

NOTE: This Closet is also made 13 inches high.

Seat substitutions page 186.

MADERA K-3001B

MADERA K-3001C

THOMAS MADDOCK'S SONS COMPANY

MADERA K-3001 V

MADE OF

DUROCK

White Vitreous China Syphon Jet Closet with Elongated Bowl; Top Inlet, Floor Outlet with Flush Valve

SPECIFICATION:

White Vitreous China Syphon Jet Closet with Elongated Bowl; Top Inlet, Floor Outlet and 1¼- or 1½-inch Brass Spud. Height 15 inches, Opening of Bowl 10½x15 inches, Water Surface 10x13 inches and 3-inch Water Seal. Mahogany Finished Seat, no Cover, with Concealed Post Hinge, White Vitreous China Bolt Caps and N. P. Brass Flush Valve with China Oscillating Handle.

Approximate weight, packed, Closet only, pounds	74
Seat only, pounds	11

(For roughing measurements, see reverse side)

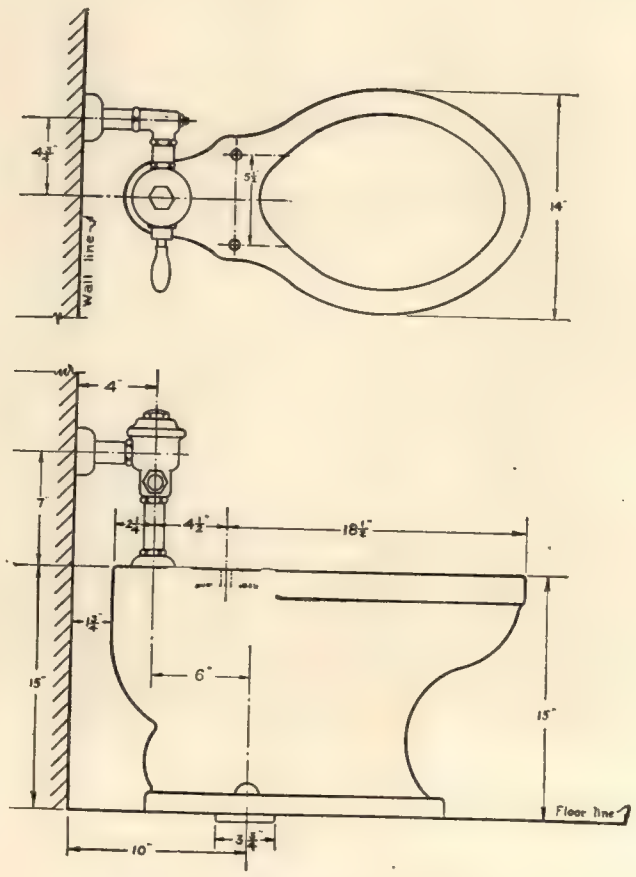

K-3001 V Roughing Measurements

Measurements may vary from ¼ to ½ inch

THOMAS MADDOCK'S SONS COMPANY

MADERA K-3005 V

MADE OF

DUROCK

White Vitreous China Syphon Jet Closet with Elongated Bowl; Top Inlet, Floor Outlet with Flush Valve

SPECIFICATION:

White Vitreous China Syphon Jet Closet with Elongated Bowl; Top Inlet, Floor Outlet and 1¼- or 1½-inch Brass Spud. Height 15 inches, Opening of Bowl 10½x15 inches, Water Surface 10x13 inches and 3-inch Water Seal. Mahogany Finished Seat, no Cover, open front, with Concealed Post Hinge, White Vitreous China Bolt Caps and N. P. Brass Flush Valve with China Oscillating Handle.

Approximate weight, packed, Closet only, pounds	74
Seat only, pounds	11

(For roughing measurements, see reverse side)

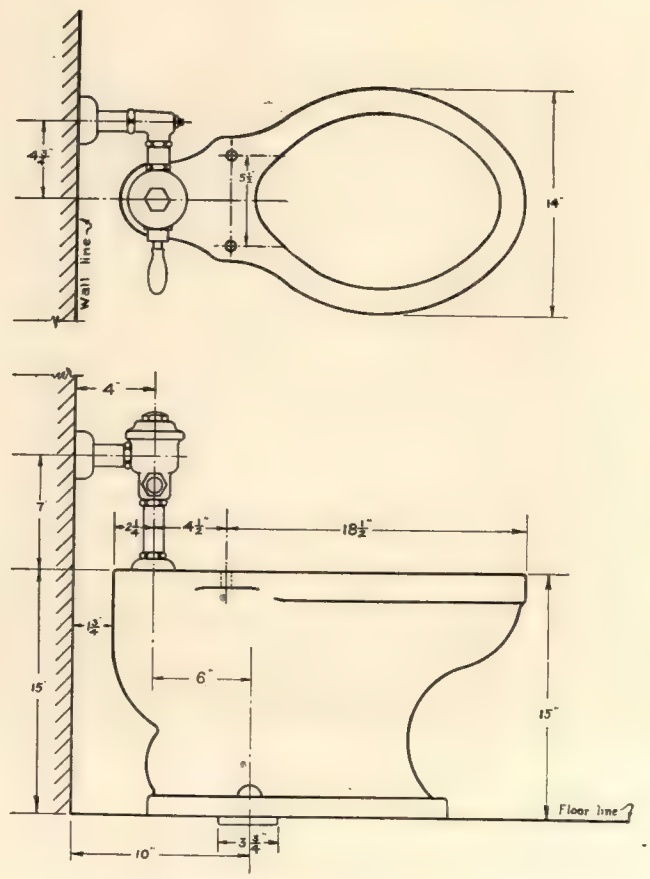

K-3005 V Roughing Measurements

Measurements may vary from ¼ to ½ inch

THOMAS MADDOCK'S SONS COMPANY

MADERA K-3006 SV

MADE OF

DUROCK

White Vitreous China Syphon Jet Closet with Elongated Bowl; Side Inlet, Floor Outlet with Flush Valve

SPECIFICATION:

White Vitreous China Syphon Jet Closet with Elongated Bowl; Side Inlet, Floor Outlet and 1¼- or 1½-inch Brass Spud. Height 15 inches, Opening of Bowl 10½x15 inches, Water Surface 10x13 inches and 3-inch Water Seal. Mahogany Finished Seat, no Cover, with Concealed Post Hinge, White Vitreous China Bolt Caps and N. P. Brass Flush Valve with China Oscillating Handle.

Approximate weight, packed, Closet only, pounds	74
Seat only, pounds	11

(For roughing measurements, see reverse side)

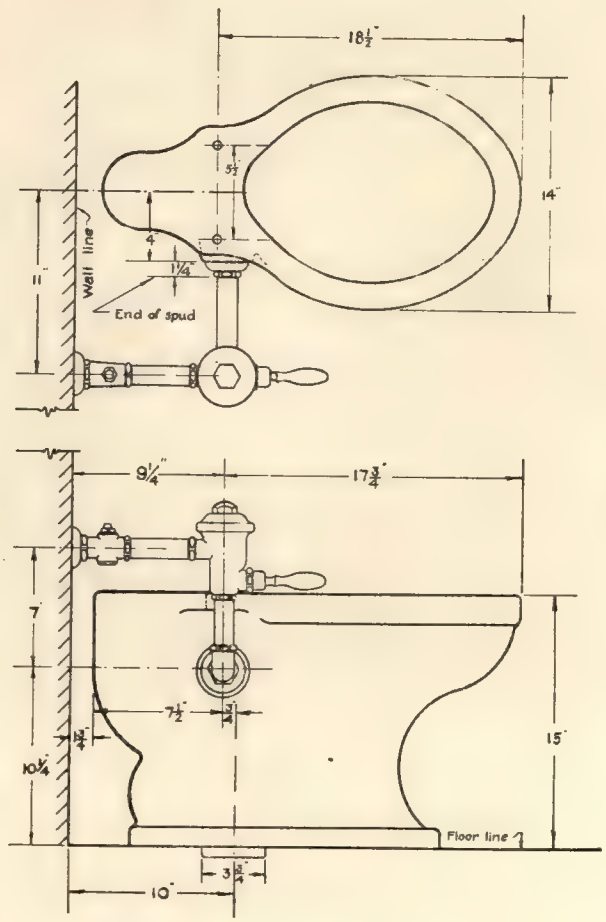

K-3006 SV Roughing Measurements

Measurements may vary from ¼ to ½ inch

THOMAS MADDOCK'S SONS COMPANY

MADERA K-3007 SV

MADE OF

DUROCK

White Vitreous China Syphon Jet Closet with Elongated Bowl; Side Inlet, Floor Outlet with Flush Valve

SPECIFICATION:

White Vitreous China Syphon Jet Closet with Elongated Bowl; Side Inlet, Floor Outlet and 1¼- or 1½-inch Brass Spud. Height 15 inches, Opening of Bowl 10½x15 inches, Water Surface 10x13 inches and 3-inch Water Seal. Mahogany Finished Seat, no Cover, open front, with Concealed Post Hinge, White Vitreous China Bolt Caps and N. P. Brass Flush Valve with China Oscillating Handle.

Approximate weight, packed, Closet only, pounds	74
Seat only, pounds	11

(For roughing measurements, see reverse side)

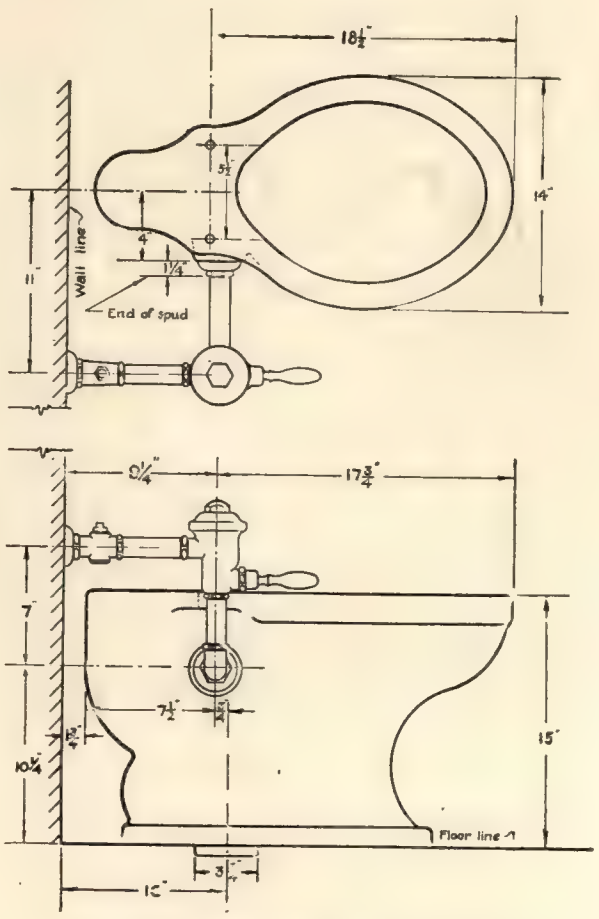

K-3007 SV Roughing Measurements

Measurements may vary from ¼ to ½ inch

THOMAS MADDOCK'S SONS COMPANY

MADERA K-3008

MADE OF

DUROCK

White Vitreous China Syphon Jet Closet with Elongated Bowl and Raised Rear Vent; Top Inlet, Floor Outlet with K-3110 Tank

SPECIFICATION:

White Vitreous China Syphon Jet Closet with Elongated Bowl and Raised Rear Vent; Top Inlet, Floor Outlet and 2-inch Brass Spud. Height 15 inches, Opening of Bowl 10½x15 inches, Water Surface 10x13 inches and 3-inch Water Seal. White Celluloid-covered Seat and Cover with Concealed Post Hinge. One-piece White Vitreous China Flush Pipe Cover and White Vitreous China Bolt Caps. K-3110 White Vitreous China Tank, fitted with N. P. Brass Flush Connection, Top Side Lever with China Handle and Escutcheon, Heavy Brass Ball Cock, Flush Valve with Large Overflow and ⅜-inch I. P. Size N. P. Brass Supply Pipe to wall with China Handle Stop Valve and China Wall Escutcheon.

Approximate weight, packed complete, pounds..... 213

NOTE: This Closet is also made 13 inches high.

(For roughing measurements, see reverse side)

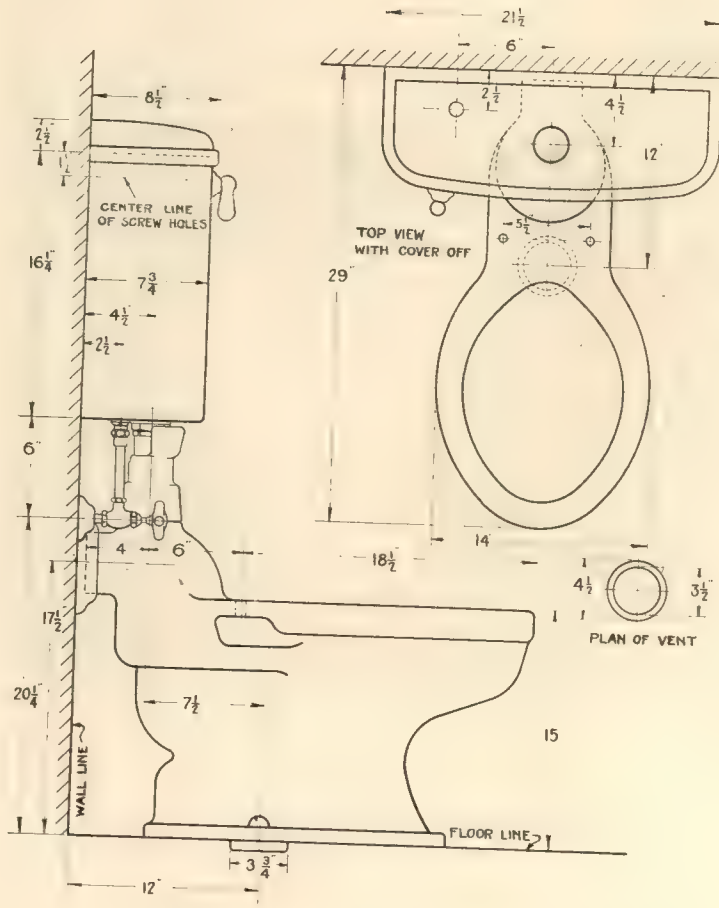

K-3008 Roughing Measurements

Measurements may vary from ¼ to ½ inch

THOMAS MADDOCK'S SONS COMPANY

MADERA K-3009

MADE OF

DUROCK

White Vitreous China Syphon Jet Closet with Elongated Bowl and Raised Rear Vent; Top Inlet, Floor Outlet with K-3112 Tank

SPECIFICATION:

White Vitreous China Syphon Jet Closet with Elongated Bowl and Raised Rear Vent; Top Inlet, Floor Outlet and 2-inch Brass Spud. Height 15 inches, Opening of Bowl 10½x15 inches, Water Surface 10x13 inches and 3-inch Water Seal. White Celluloid-covered Seat and Cover, open front, with Concealed Post Hinge. One-piece White Vitreous China Flush Pipe Cover and White Vitreous China Bolt Caps. K-3112 White Vitreous China Tank, fitted with N. P. Brass Flush Connection, under-pull Lever with China Handle, Heavy Brass Ball Cock, Flush Valve with Large Overflow and ⅜-inch I. P. size N. P. Brass Supply Pipe to wall with China Handle Stop Valve and China Wall Escutcheon.

Approximate weight, packed complete, pounds 215

NOTE: This Closet is also made 13 inches high.

(For roughing measurements, see reverse side)

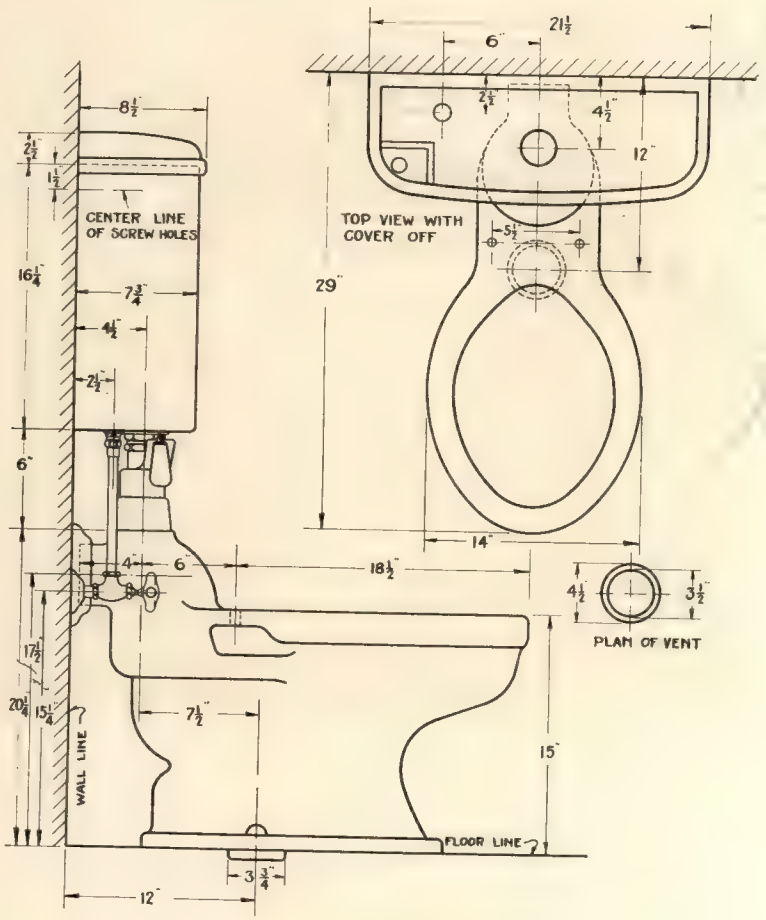

K-3009 Roughing Measurements

Measurements may vary from ¼ to ½ inch

THOMAS MADDOCK'S SONS COMPANY

MADERA K-3009 V

MADE OF

DUROCK

White Vitreous China Syphon Jet Closet with Elongated Bowl and Raised Rear Vent; Top Inlet, Floor Outlet with Flush Valve

SPECIFICATION:

White Vitreous China Syphon Jet Closet with Elongated Bowl; and Raised Rear Vent; Top Inlet, Floor Outlet and 1¼- or 1½-inch Brass Spud. Height 15 inches, Opening of Bowl 10½x15 inches, Water Surface 10x13 inches and 3-inch Water Seal. Mahogany Finished Seat, no Cover, Open Front, with Concealed Post Hinge, White Vitreous China Bolt Caps and N. P. Brass Flush Valve with China Oscillating Handle.

Approximate weight, packed, Closet only, pounds	95
Seat only, pounds	14

(For roughing measurements, see reverse side)

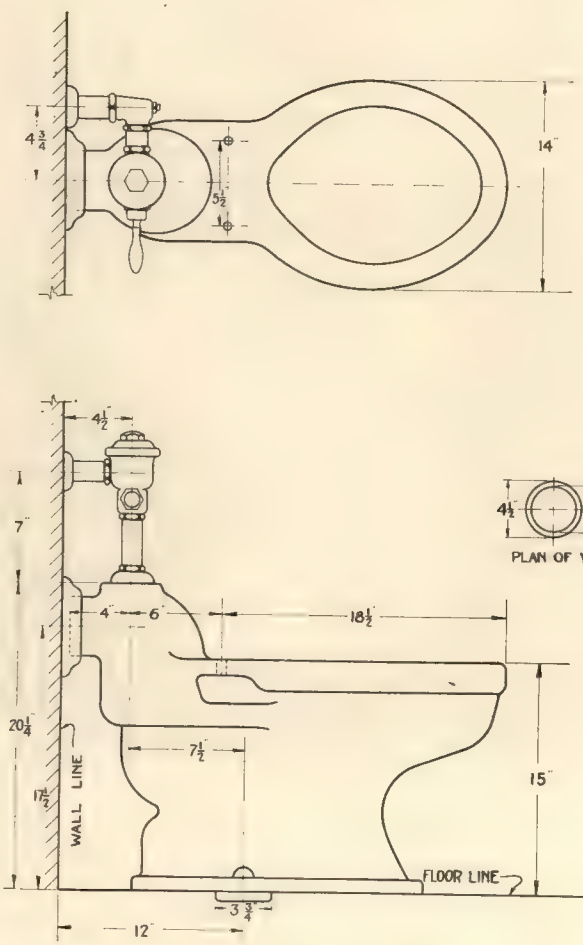

K-3009 V Roughing Measurements

Measurements may vary from ¼ to ½ inch

THOMAS MADDOCK'S SONS COMPANY

MADERA K-3010 V

MADE OF

DUROCK

White Vitreous China Syphon Jet Closet with Elongated Bowl; Top Inlet, Floor Outlet with Seat Action Flush Valve

SPECIFICATION:

White Vitreous China Syphon Jet Closet with Elongated Bowl; Top Inlet, Floor Outlet and 1¼- or 1½-inch Brass Spud. Height 15 inches, Opening of Bowl 10½x15 inches, Water Surface 10x13 inches and 3-inch Water Seal. Mahogany Finished Seat, no Cover, open front, with heavy N. P. Brass Bar Hinge, White Vitreous China Bolt Caps and N. P. Brass Seat Action Flush Valve.

Approximate weight, packed, Closet only, pounds	74
Seat only, pounds	11

(For roughing measurements, see reverse side)

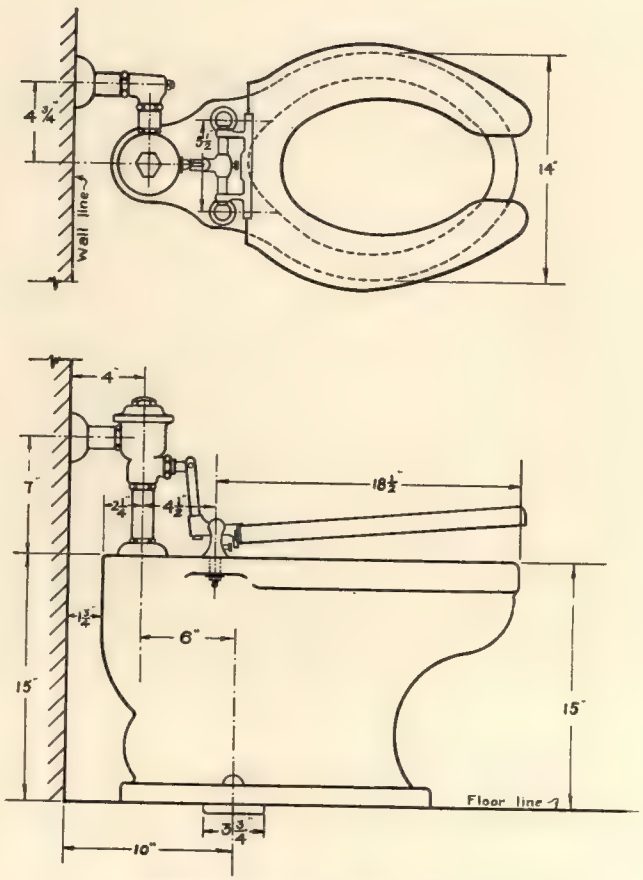

K-3010 V Roughing Measurements

Measurements may vary from ¼ to ½ inch

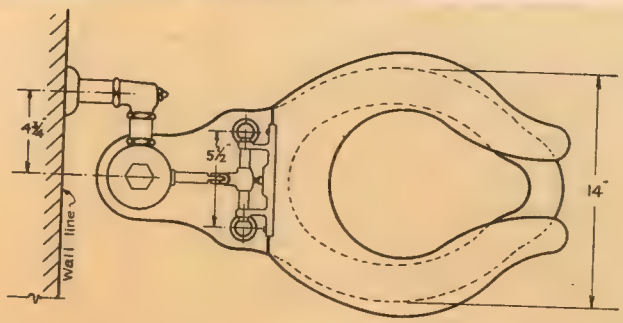

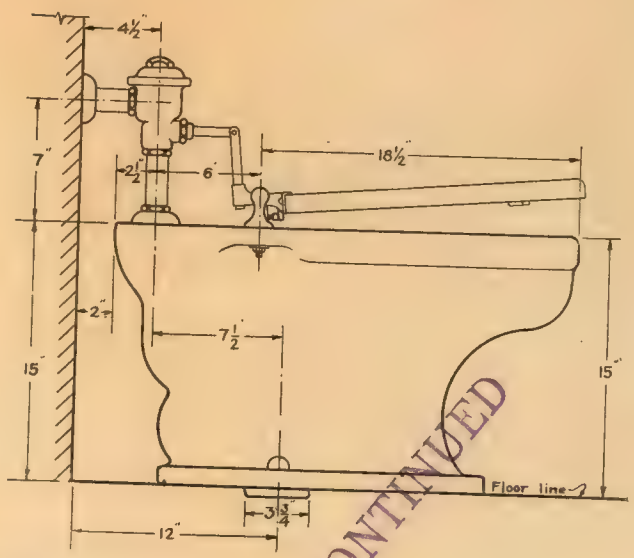

DISCONTINUED

K-3010 V Roughing Measurements

Measurements may vary from ¼ to ½ inch

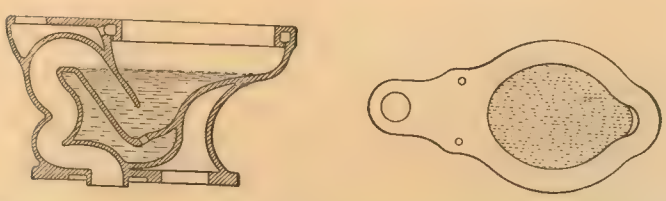

The above illustrations show the cross section and top view of the Madera closet with extended front lip.

MADISON K-3017

White Vitreous China Reversed Trap Syphon Action Closet with Jet; Back Inlet, Floor Outlet with K-3111 Tank

SPECIFICATION:

White Vitreous China Reversed Trap Syphon Action Closet with Jet, Back Inlet, Floor Outlet and 2-inch Brass Spud. Height 15 inches, Opening of Bowl 10x12 inches, Water Surface 8½x10½ inches and 3-inch Water Seal. Mahogany Finished Seat and Cover with heavy N. P. Brass Bar Hinge. White Vitreous China Bolt Caps. K-3111 White Vitreous China Tank, fitted with N. P. Brass Flush Connection, Top Side Lever with China Handle and Escutcheon, Heavy Brass Ball Cock and Flush Valve and ⅜-inch I. P. Size N. P. Brass Supply Pipe to floor with China Floor Escutcheon.

Approximate weight, combination packed complete in one crate, pounds	166
Closet only, pounds	70

NOTE: This Closet is also made with extended front lip.

Seat substitutions page 188

THOMAS MADDOCK'S SONS COMPANY

MADISON K-3017 V

MADE OF

DUROCK

White Vitreous China Reversed Trap Syphon Action Closet with Jet; Back Inlet, Floor Outlet with Flush Valve

SPECIFICATION:

White Vitreous China Reversed Trap Syphon Action Closet with Jet; Back Inlet, Floor Outlet and 1¼- or 1½-inch Brass Spud. Height 15 inches, Opening of Bowl 10x12 inches, Water Surface 8½x10½ inches and 3-inch Water Seal. Mahogany Finished Seat, no Cover, with heavy N. P. Brass Bar Hinge, White Vitreous China Bolt Caps and N. P. Brass Flush Valve with China Oscillating Handle.

Approximate weight, packed, Closet only, pounds..... 60
Seat only, pounds..... 9

(For roughing measurements, see reverse side)

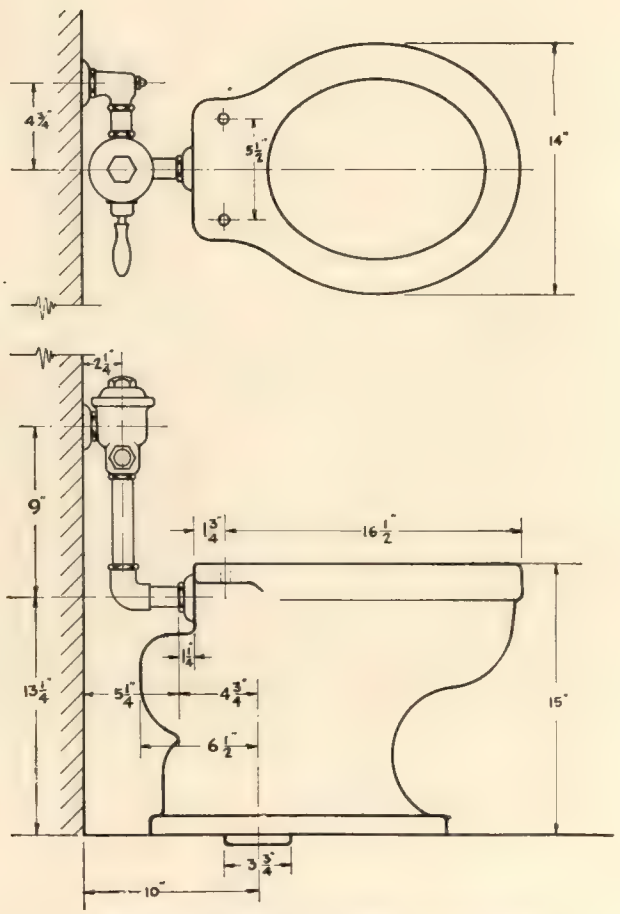

K-3017 V Roughing Measurements

Measurements may vary from ¼ to ½ inch

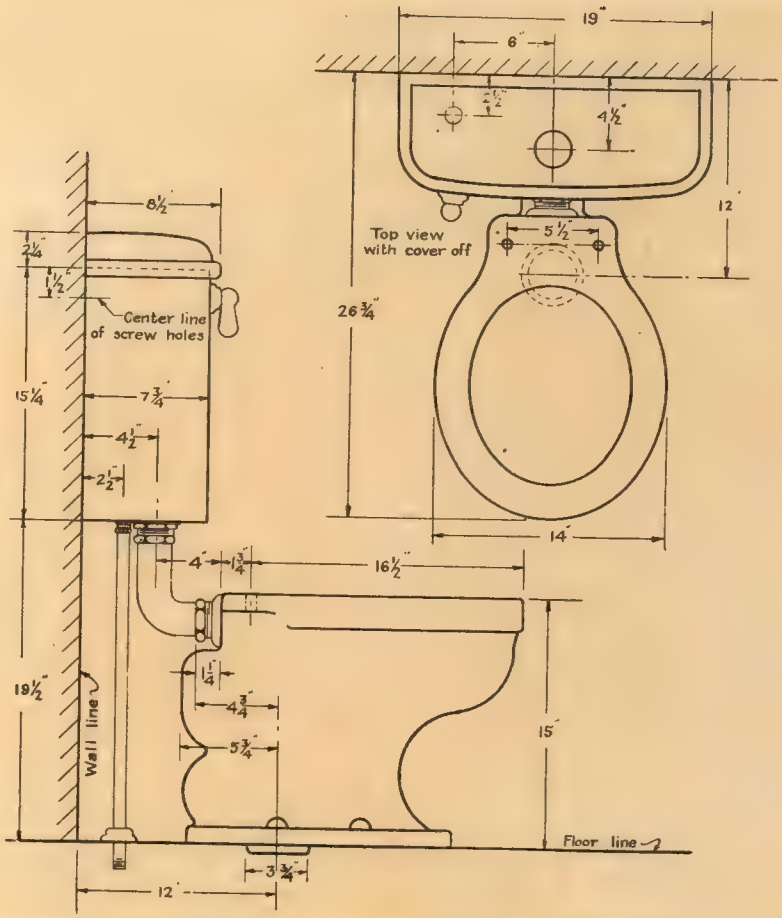

K-3017 Roughing Measurements

Measurements may vary from ¼ to ½ inch

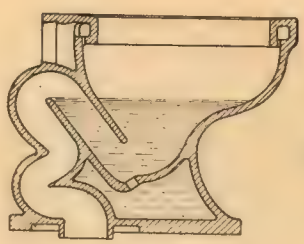

The accompanying illustration shows the cross section of the Madison closet.

MADISON K-3017 S V

White Vitreous China Reversed Trap Syphon Action Closet with Jet; Side Inlet, Floor Outlet with Flush Valve

SPECIFICATION:

White Vitreous China Reversed Trap Syphon Action Closet with Jet, Side Inlet, Floor Outlet, and 1¼- or 1½-inch Brass Spud. Height 15 inches, Opening of Bowl 10x12 inches, Water Surface 8½x10½ inches and 3-inch Water Seal. Mahogany Finished Seat, no Cover, with heavy N. P. Brass Bar Hinge, White Vitreous China Bolt Caps and N. P. Brass Flush Valve with China Oscillating Handle.

Approximate weight, packed, Closet only, pounds	70
Seat only, pounds	14

NOTE: This Closet is also made with extended front lip.

Seat substitutions page 188.

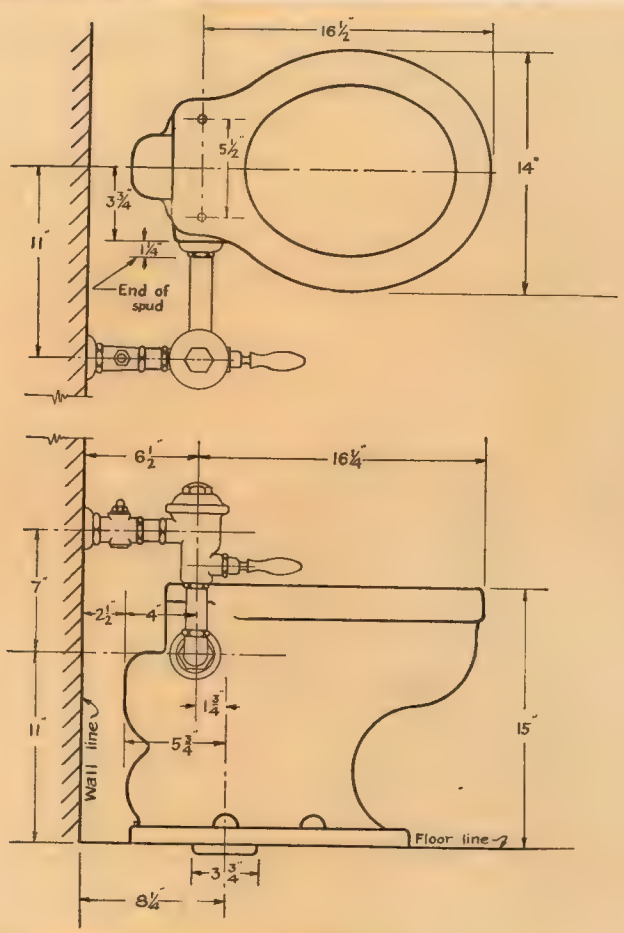

K-3017 S V Roughing Measurements

Measurements may vary from ¼ to ½ inch

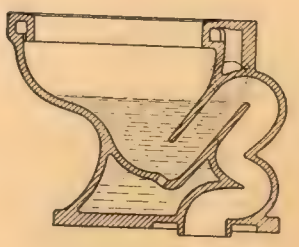

The accompanying illustration shows the cross section of the Madison closet.

MADORIC K-3020

White Vitreous China Syphon Action Washdown Closet; Back Inlet, Floor Outlet with K-3111 Tank

SPECIFICATION:

White Vitreous China Syphon Action Washdown Closet with Back Inlet, Floor Outlet and 2-inch Brass Spud. Height 15 inches, Opening of Bowl 11x13 inches, Water Surface 7x7 inches and 3-inch Water Seal. Mahogany Finished Seat and Cover with heavy N. P. Brass Bar Hinge. White Vitreous China Bolt Caps. K-3111 White Vitreous China Tank, fitted with N. P. Brass Flush Connection, Top Side Lever, Heavy Brass Ball Cock and Flush Valve and 3/8-inch I. P. Size N. P. Brass Supply Pipe to floor with N. P. Brass Floor Escutcheon.

Approximate weight, combination packed complete in one crate, pounds	155
Closet only, pounds	53

NOTE: This closet can also be furnished with jet.

Seat substitutions page 188.

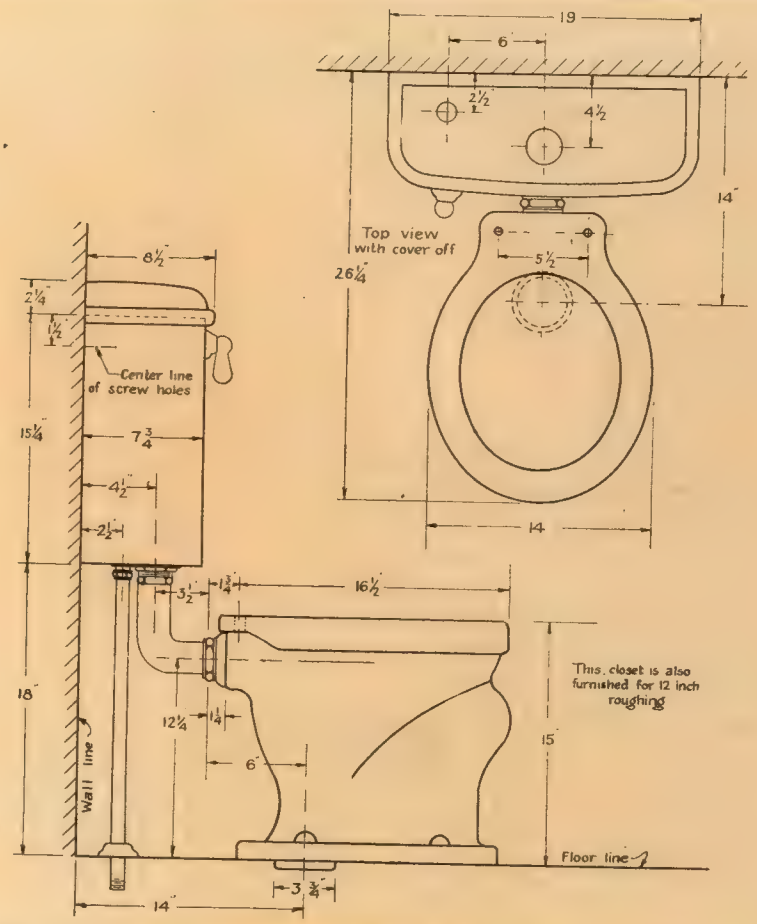

K-3020 Roughing Measurements

Measurements may vary from ¼ to ½ inch

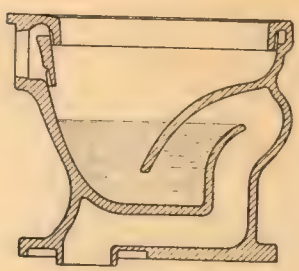

The accompanying illustration shows the cross section of the Madoric closet.

MADORIC K-3020 W

White Vitreous China Syphon Action Washdown Closet; Back Inlet, Floor Outlet with K-3111 Tank

SPECIFICATION:

White Vitreous China Syphon Action Washdown Closet with Back Inlet, Floor Outlet and 2-inch Brass Spud. Height 15 inches, Opening of Bowl 11x13 inches, Water Surface 7x7 inches and 3-inch Water Seal. White Celluloid-covered Seat and Cover with heavy N. P. Brass Bar Hinge. White Vitreous China Bolt Caps. K-3111 White Vitreous China Tank, fitted with N. P. Brass Flush Connection, Top Side Lever, Heavy Brass Ball Cock and Flush Valve and ⅜-inch I. P. Size N. P. Brass Supply Pipe to floor with N. P. Brass Floor Escutcheon.

Approximate weight, combination packed complete in one crate, pounds	155
Closet only, pounds	53

NOTE: This Closet can also be furnished with jet.

Seat substitutions page 188.

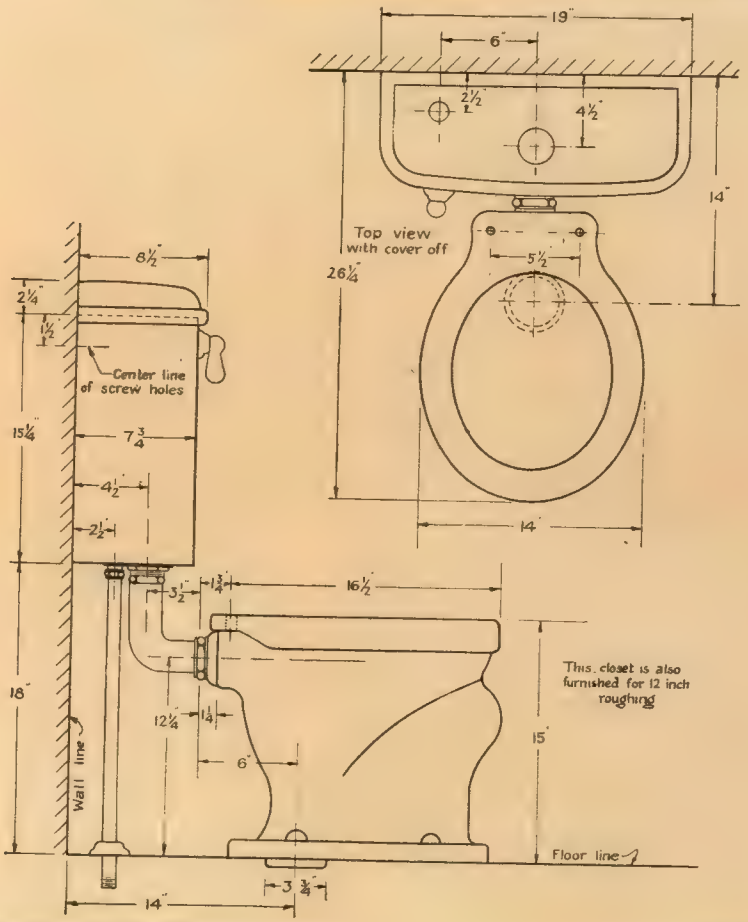

K-3020 W Roughing Measurements

Measurements may vary from ¼ to ½ inch

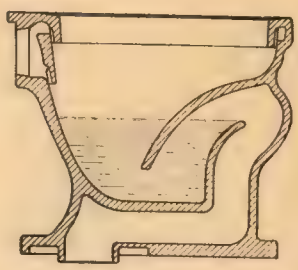

The accompanying illustration shows the cross section of the Madoric closet.

MADORIC K-3020 V

White Vitreous China Syphon Action Washdown Closet; Back Inlet, Floor Outlet with Flush Valve

SPECIFICATION

White Vitreous China Syphon Action Washdown Closet with Back Inlet, Floor Outlet and 1¼- or 1½-inch Brass Spud. Height 15 inches, Opening of Bowl 11x13 inches, Water Surface 7x7 inches and 3-inch Water Seal. Mahogany Finished Seat, no Cover, with heavy N. P. Brass Bar Hinge, White Vitreous China Bolt Caps and N. P. Brass Flush Valve with China Oscillating Handle.

Approximate weight, packed, Closet only, pounds 53
Seat only, pounds 13

NOTE: This Closet can also be furnished with jet.

Seat substitutions page 188.

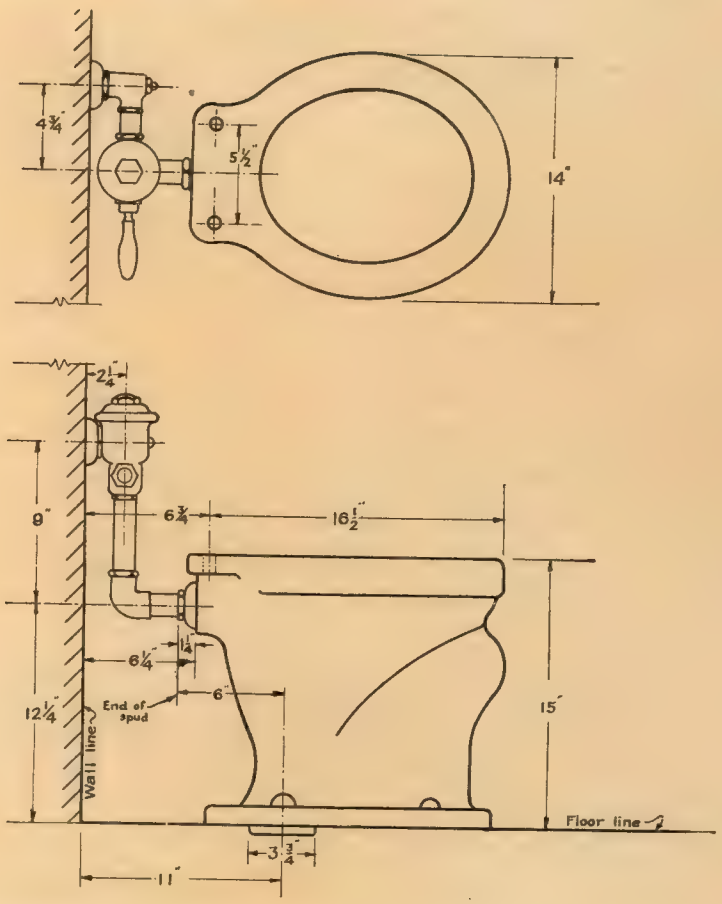

K-3020 V Roughing Measurements

Measurements may vary from ¼ to ½ inch

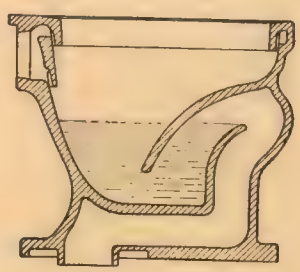

The accompanying illustration shows the cross section of the Madoric closet.

DISCONTINUED

MADERNO K-3023

White Vitreous China Syphon Action Washdown Closet with Jet and extra long Bowl; Back Inlet, Floor Outlet with K-3111 Tank

SPECIFICATION:

White Vitreous China Syphon Action Washdown Closet with Jet and extra long Bowl, Back Inlet, Floor Outlet and 2-inch Brass Spud. Height 15 inches, Opening of Bowl 11x14½ inches, Water Surface 7x7½ inches, Sanitary Rim with 1¼-inch downward projection inside of Bowl and 3-inch Water Seal. Mahogany Finished Seat and Cover with Concealed Post Hinge. White Vitreous China Bolt Caps. K-3111 White Vitreous China Tank, fitted with N. P. Brass Flush Connection, Top Side Lever with China Handle and Escutcheon, Heavy Brass Ball Cock, Flush Valve with Large Overflow and ⅜-inch I. P. Size N. P. Brass Supply Pipe to floor with China Floor Escutcheon.

Approximate weight, combination packed complete in one crate, pounds 160

Seat substitutions page 187.

MADERNO K-3023

MADERNO K-3023W

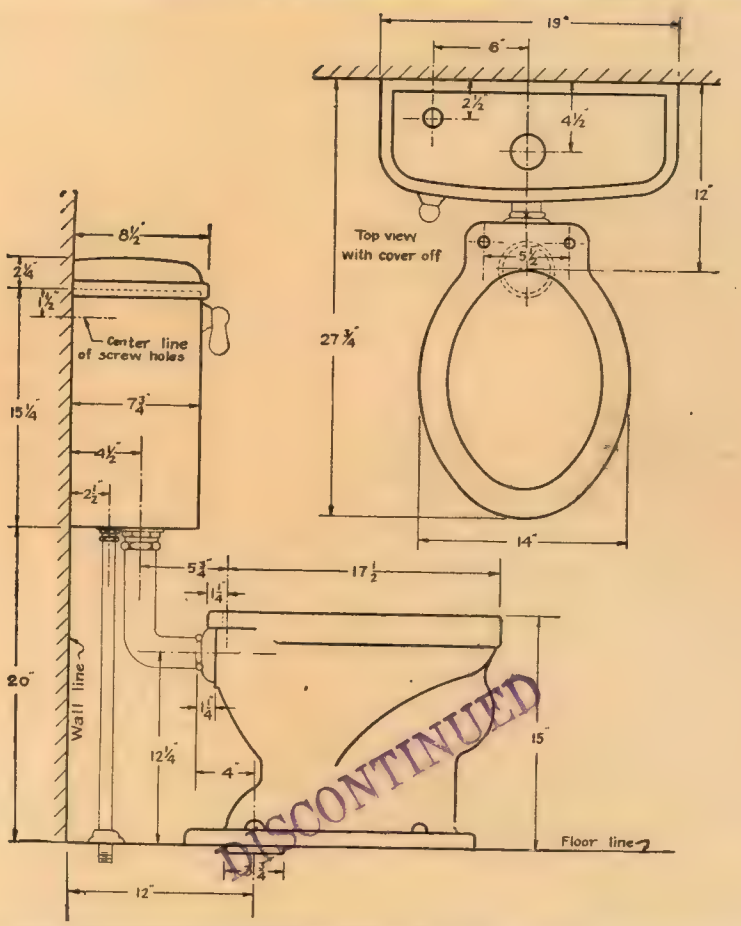

K-3023 W Roughing Measurements

Measurements may vary from ¼ to ½ inch

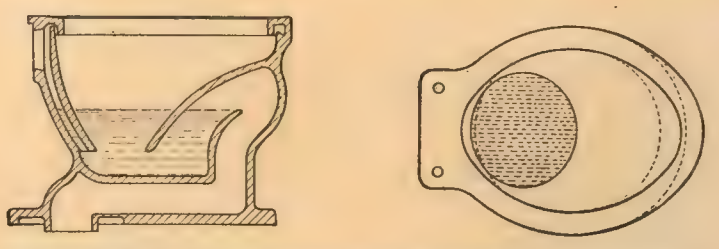

The dotted line on the top view shows the top of an ordinary bowl. It will be seen by this that the Maderno has an extended front bowl and cut back rim. It also has a jet and a thin sanitary rim.

MADERNO K-3025

White Vitreous China Syphon Action Washdown Closet with Jet and extra long Bowl; Back Inlet, Floor Outlet with K-3111 Tank

SPECIFICATION:

White Vitreous China Syphon Action Washdown Closet with Jet and extra long Bowl, Back Inlet, Floor Outlet and 2-inch Brass Spud. Height 15 inches, Opening of Bowl 11x14½ inches, Water Surface 7x7½ inches, Sanitary Rim with 1¼-inch downward projection inside of Bowl and 3-inch Water Seal. Mahogany Finished Seat and Cover, open front, with Concealed Post Hinge. White Vitreous China Bolt Caps. K-3111 White Vitreous China Tank, fitted with N. P. Brass Flush Connection, Top Side Lever with China Handle and Escutcheon, Heavy Brass Ball Cock, Flush Valve with Large Overflow and ⅜-inch I. P. Size N. P. Brass Supply Pipe to floor with China Floor Escutcheon.

Approximate weight, combination packed complete in one crate, pounds 160

Seat substitutions page 187.

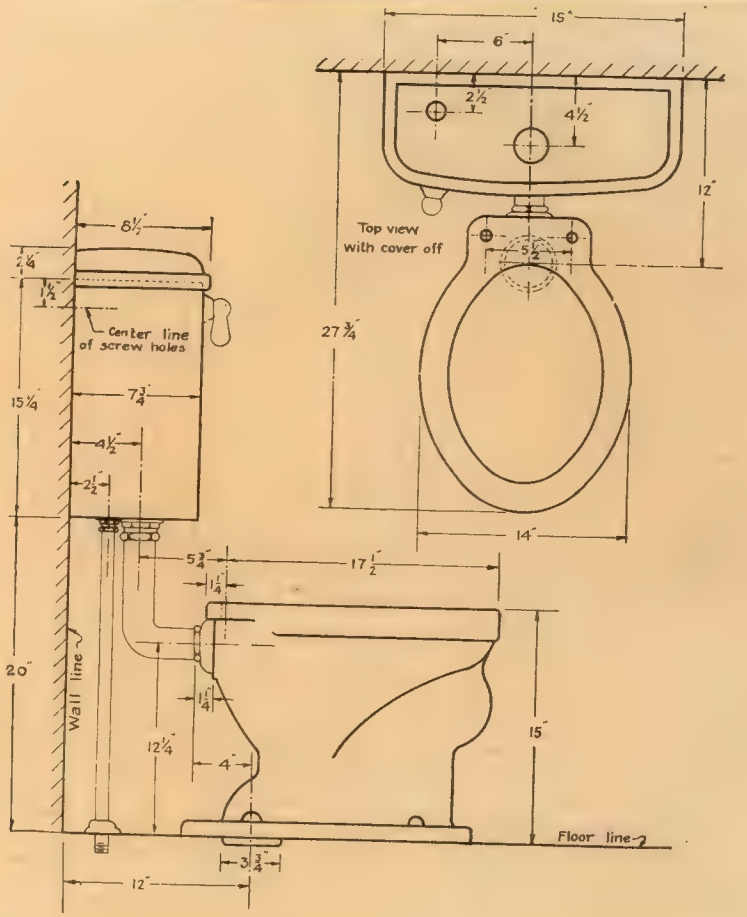

K-3025 Roughing Measurements

Measurements may vary from ¼ to ½ inch

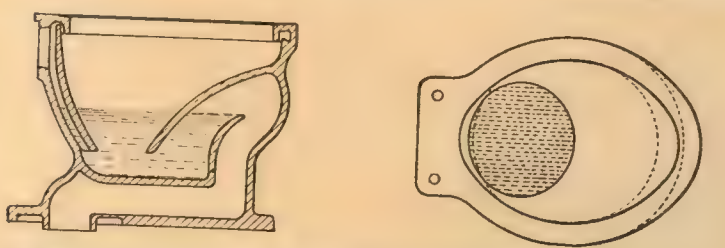

The dotted line on the top view shows the top of an ordinary bowl. It will be seen by this that the Maderno has an extended front bowl and cut back rim. It also has a jet and a thin sanitary rim.

THOS. MADDOCKS SONS CO. TRENTON, N.J.

MADERNO K-3025 V

White Vitreous China Syphon Action Washdown Closet with Jet and extra long Bowl; Back Inlet, Floor Outlet with Flush Valve

SPECIFICATION:

White Vitreous China Syphon Action Washdown Closet with Jet and extra long Bowl, Back Inlet, Floor Outlet and 1¼- or 1½-inch Brass Spud. Height 15 inches, Opening of Bowl 11x14½ inches, Water Surface 7x7½ inches, Sanitary Rim with 1¼-inch downward projection inside of Bowl and 3-inch Water Seal. Mahogany Finished Seat, no Cover, open Front, with Concealed Post Hinge, White Vitreous China Bolt Caps and N. P. Brass Flush Valve with China Oscillating Handle.

Approximate weight, packed, Closet only, pounds 66
Seat only, pounds 14

Seat substitutions page 187.

THOMAS MADDOCK'S SONS COMPANY

MADERNO K-3025 W

MADE OF

DUROCK

White Vitreous China Syphon Action Washdown Closet with Jet and Elongated Bowl; Back Inlet, Floor Outlet with K-3111 Tank

SPECIFICATION:

White Vitreous China Syphon Action Washdown Closet with Jet and Elongated Bowl; Back Inlet, Floor Outlet and 2-inch Brass Spud. Height 15 inches, Opening of Bowl 10½x15 inches, Water Surface 8x8 inches, Sanitary Rim with 1¼-inch downward projection inside of Bowl and 3-inch Water Seal. White Celluloid-covered Seat and Cover, open front, with Concealed Post Hinge, White Vitreous China Bolt Caps. K-3111 White Vitreous China Tank, fitted with N. P. Brass Flush Connection, Top Side Lever with China Handle and Escutcheon, Heavy Brass Ball Cock, Flush Valve with Large Overflow and ⅜-inch I. P. Size N. P. Brass Supply Pipe to floor with China Floor Escutcheon.

Approximate weight, combination packed complete in one crate, pounds..... 160

(For roughing measurements, see reverse side)

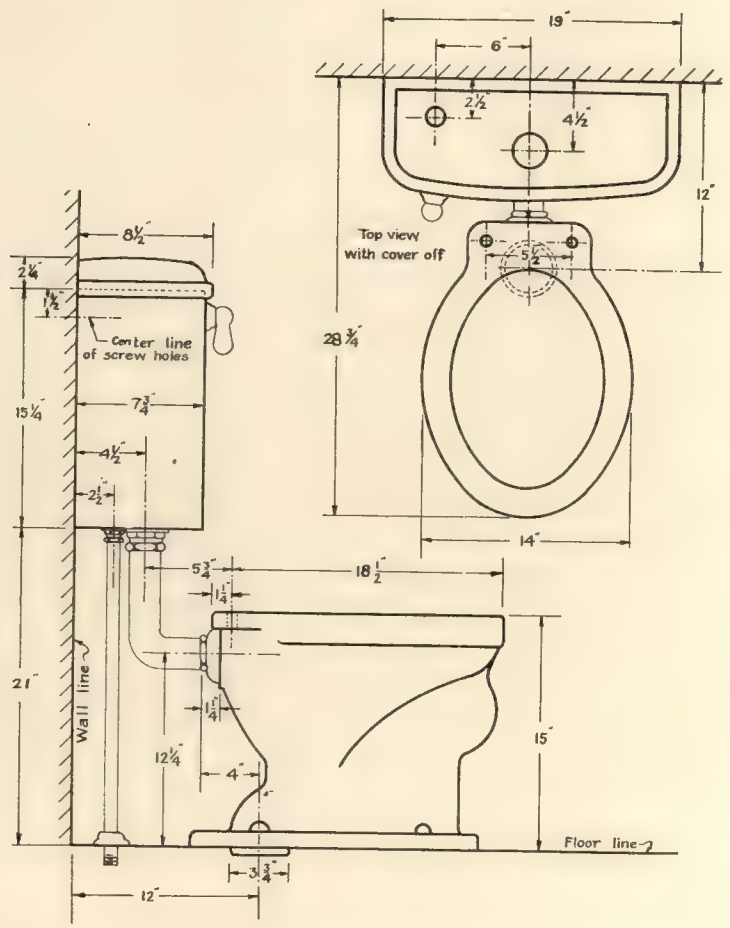

K-3025 W Roughing Measurements

Measurements may vary from ¼ to ½ inch

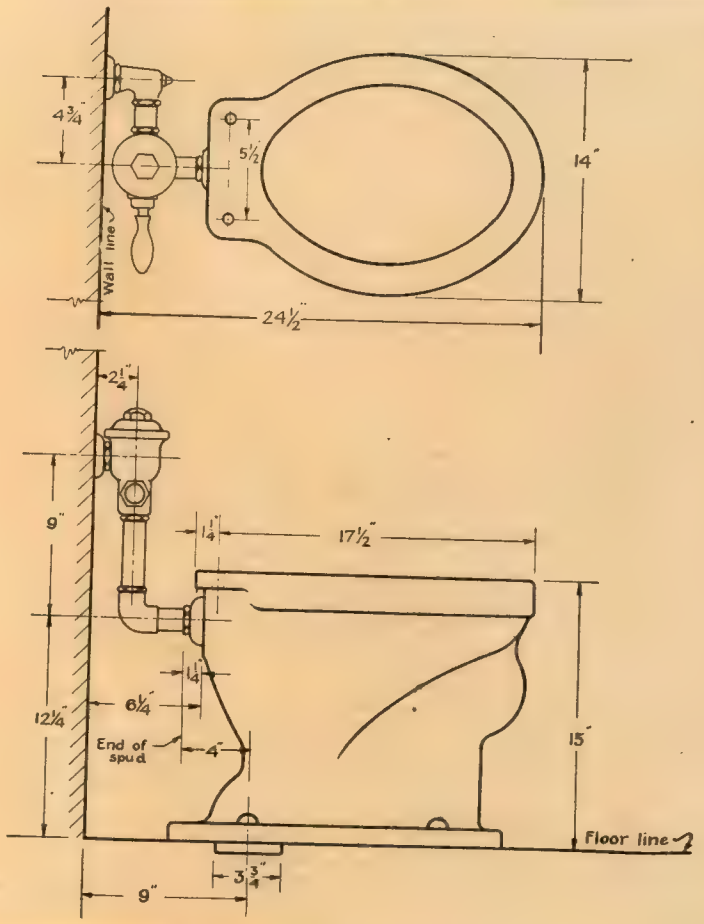

K-3025 V Roughing Measurements

Measurements may vary from ¼ to ½ inch

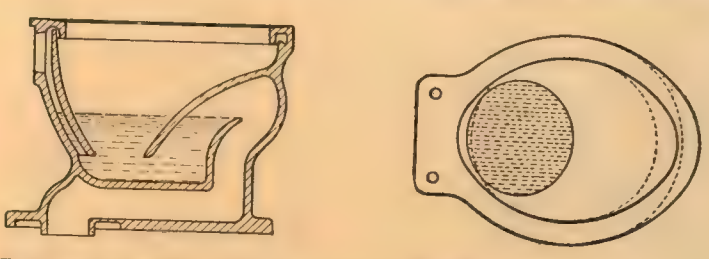

The dotted line on the top view shows the top of an ordinary bowl. It will be seen by this that the Maderno has an extended front bowl and cut back rim. It also has a jet and a thin sanitary rim.

MADEX K-3027

White Vitreous China Syphon Action Washdown Closet with Integral China Seat; Back Inlet, Floor Outlet with K-3111 Tank

SPECIFICATION:

White Vitreous China Syphon Action Washdown Closet with Integral China Seat, Back Inlet, Floor Outlet and 2-inch Brass Spud. Height 15 inches, Opening of Bowl 8x11 inches, Water Surface 7x7 inches and 3-inch Water Seal. White Vitreous China Bolt Caps. K-3111 White Vitreous China Tank, fitted with N. P. Brass Flush Connection, Top Side Lever, Heavy Brass Ball Cock and Flush Valve and ⅜-inch I. P. Size N. P. Brass Supply Pipe to floor with N. P. Brass Floor Escutcheon.

Approximate weight, combination packed complete in one crate, pounds	140
Closet only, pounds	57

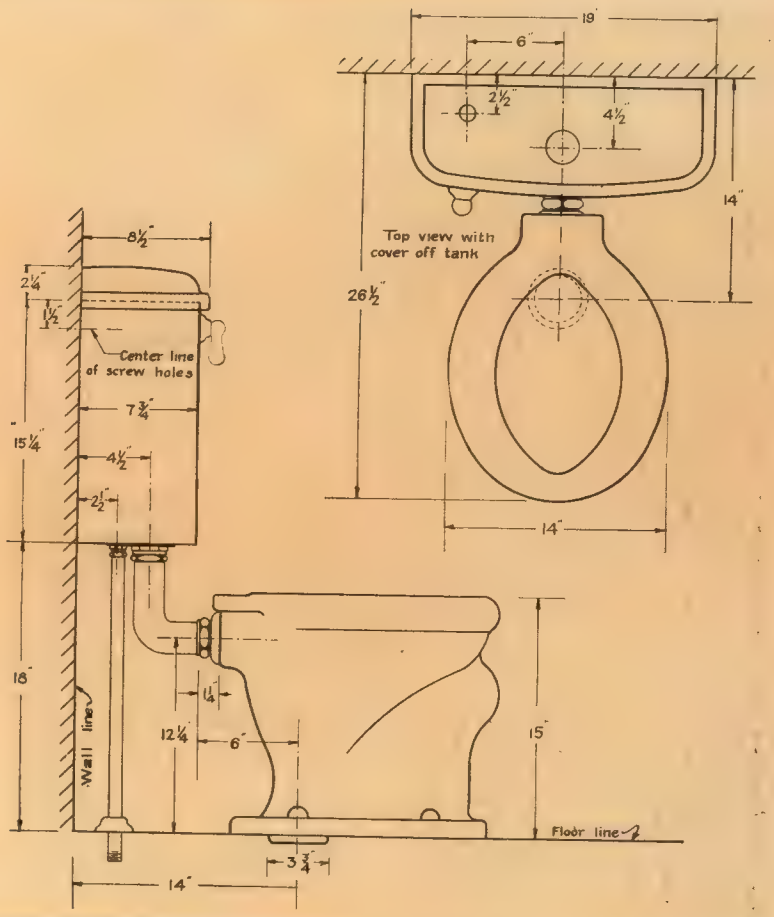

K-3027 Roughing Measurements

Measurements may vary from ¼ to ½ inch

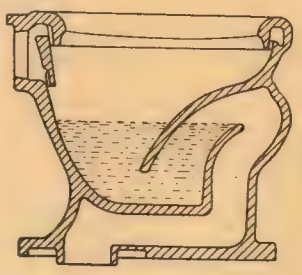

The accompanying illustration shows the cross section of the Madex integral seat closet.

DISCONTINUED

MADAWAN K-3030

White Vitreous China Giant Washdown Closet; Back Inlet, Floor Outlet with K-3115 High Tank

SPECIFICATION:

White Vitreous China Giant Washdown Closet with Back Inlet, Floor Outlet and 1¼- or 1½-inch Brass Spud. Height 16½ inches, Opening of Bowl 10x12 inches, Water Surface 5x6 inches and 2½-inch Water Seal. Mahogany Finished Seat, no Cover, open front, with heavy N. P. Brass Bar Hinge. K-3115 White Vitreous China High Tank, fitted with N. P. Brass Flush Pipe, N. P. Brass Chain with China Handle, Heavy Brass Ball Cock and Flush Valve and N. P. Brass Tank Supports.

Approximate weight, packed complete, pounds	200
Closet only, pounds	82

NOTE: This Closet is also furnished with Integral China Seat.

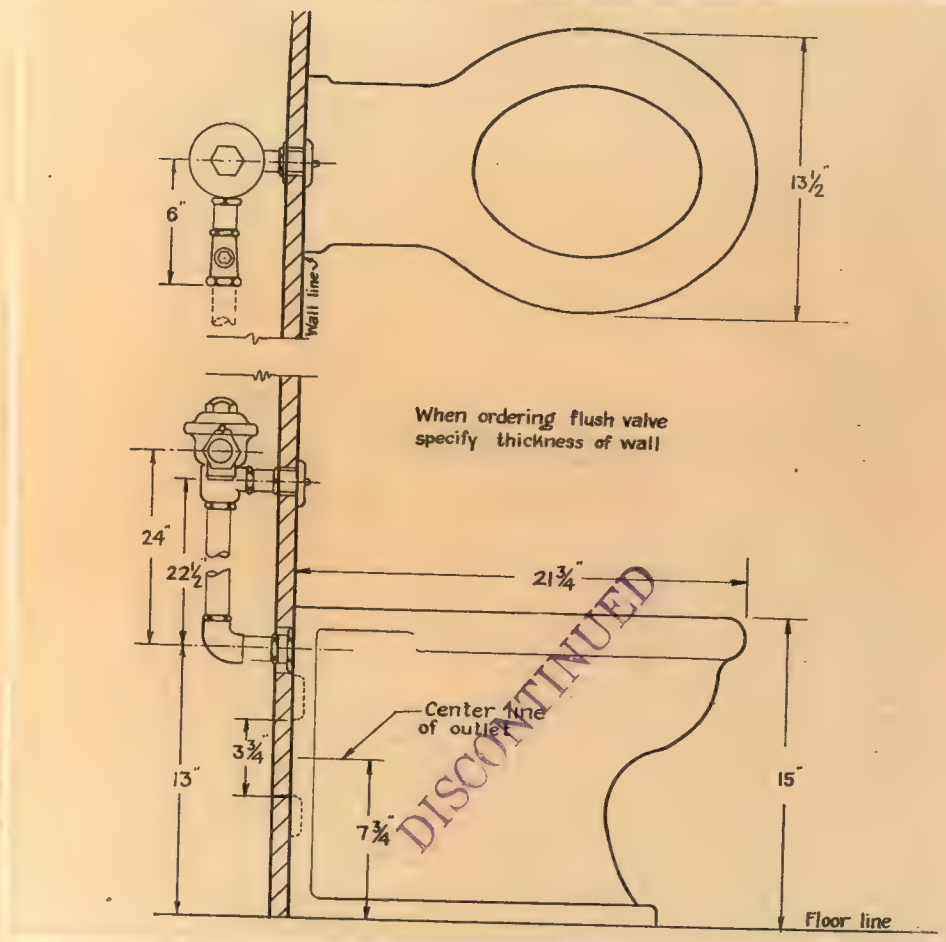

K-3032 V Roughing Measurements

Measurements may vary from ¼ to ½ inch

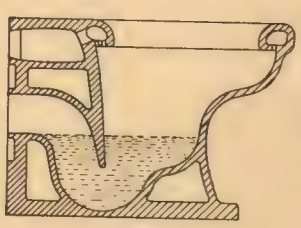

The accompanying illustration shows the cross section of the Madova integral seat closet.

MADCLIFF K-3034

White Vitreous China Syphon Jet Closet; Top Inlet, Floor Outlet with K-3111 Tank

SPECIFICATION:

White Vitreous China Syphon Jet Closet with Top Inlet, Floor Outlet and 2-inch Brass Spud. Height 15 inches, Opening of Bowl 11x13 inches, Water Surface 10x12 inches and 3-inch Water Seal. White Celluloid-covered Seat and Cover with heavy N. P. Brass Bar Hinge. One-piece White Vitreous China Flush Pipe Cover and White Vitreous China Bolt Caps. K-3111 White Vitreous China Tank, fitted with N. P. Brass Flush Connection, Top side Lever with China Handle and Escutcheon, Heavy Brass Ball Cock, Flush Valve with Large Overflow and 3/8-inch I. P. Size N. P. Brass Supply Pipe to floor with China Handle Stop Valve and China Floor Escutcheon.

Approximate weight, combination packed complete in one crate, pounds 180
Closet only, pounds 74

Seat substitutions page 188.

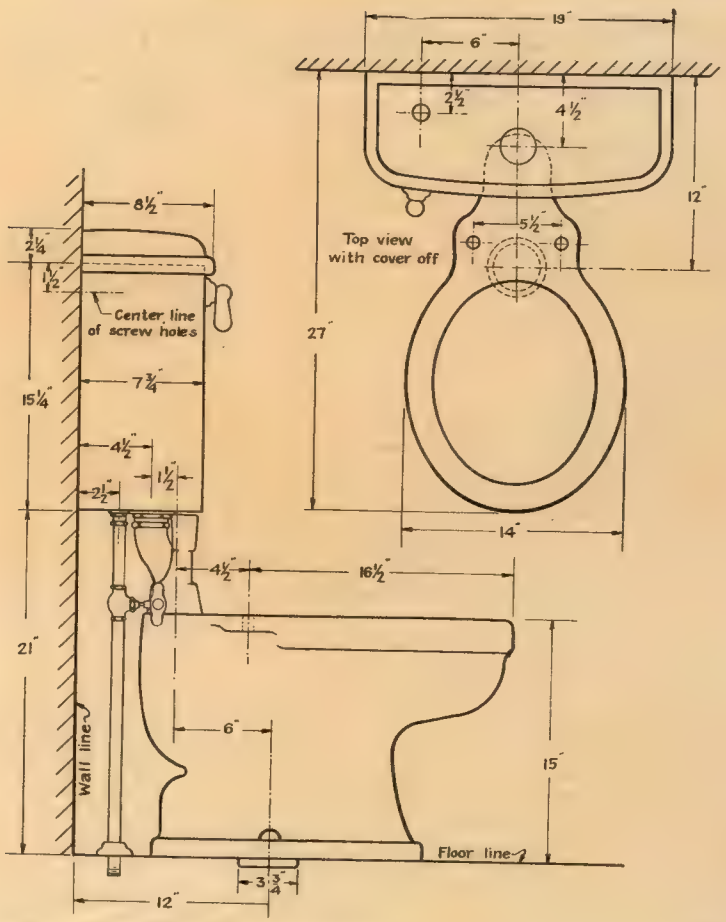

K-3034 Roughing Measurements

Measurements may vary from ¼ to ½ inch

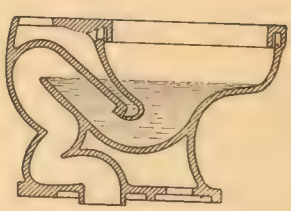

The accompanying illustration shows the cross section of the Madcliff Syphon Jet closet.

MADCLIFF K-3035

White Vitreous China Syphon Jet Closet; Top Inlet, Floor Outlet with K-3111 Tank

SPECIFICATION:

White Vitreous China Syphon Jet Closet with Top Inlet, Floor Outlet and 2-inch Brass Spud. Height 15 inches, Opening of Bowl 11x13 inches, Water Surface 10x12 inches and 3-inch Water Seal. Mahogany Finished Seat and Cover with heavy N. P. Brass Bar Hinge. One-piece White Vitreous China Flush Pipe Cover and White Vitreous China Bolt Caps. K-3111 White Vitreous China Tank, fitted with N. P. Brass Flush Connection, Top Side Lever with China Handle and Escutcheon, Heavy Brass Ball Cock, Flush Valve with Large Overflow and 3/8-inch I. P. Size N. P. Brass Supply Pipe to floor with China Handle Stop Valve and China Floor Escutcheon.

Approximate weight, combination packed complete in one crate, pounds	180
Closet only, pounds	74

Seat substitutions page 188.

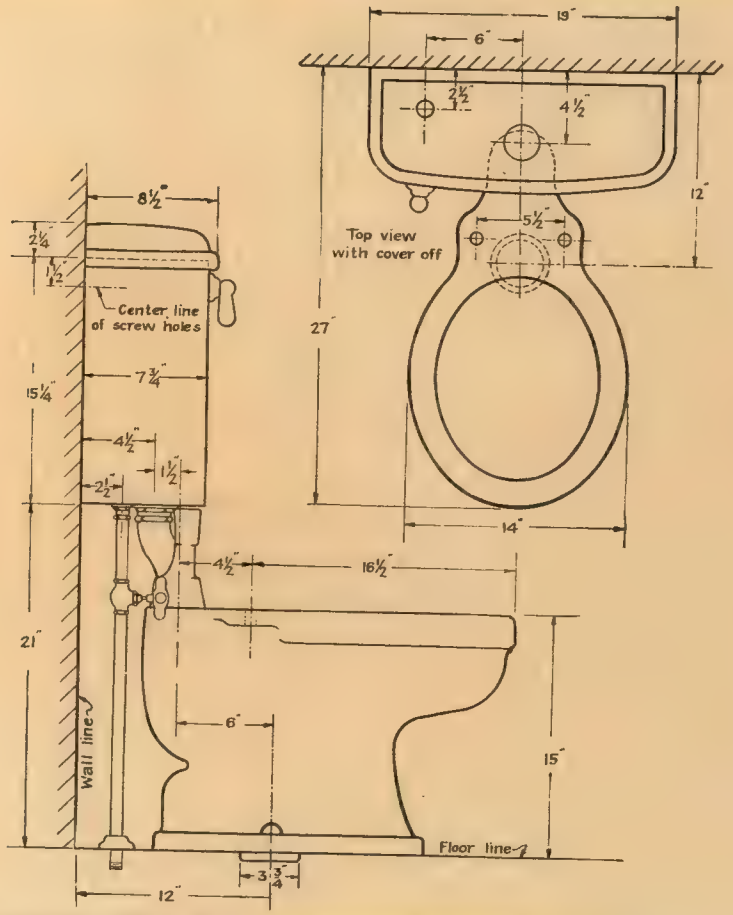

K-3035 Roughing Measurements

Measurements may vary from ¼ to ½ inch

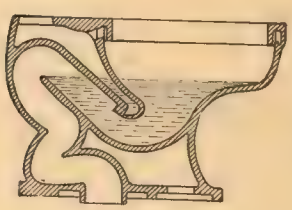

The accompanying illustration shows the cross section of the Madcliff Syphon Jet closet.

MADCLIFF K-3035 V

White Vitreous China Syphon Jet Closet; Top Inlet, Floor Outlet with Flush Valve

SPECIFICATION:

White Vitreous China Syphon Jet Closet with Top Inlet, Floor Outlet and 1¼- or 1½-inch Brass Spud. Height 15 inches, Opening of Bowl 11x13 inches, Water Surface 10x12 inches and 3-inch Water Seal. Mahogany Finished Seat, no Cover, with heavy N. P. Brass Bar Hinge, White Vitreous China Bolt Caps and N. P. Brass Flush Valve with China Oscillating Handle.

Approximate weight, packed, Closet only, pounds 74
Seat only, pounds 13

Seat substitutions page 188.

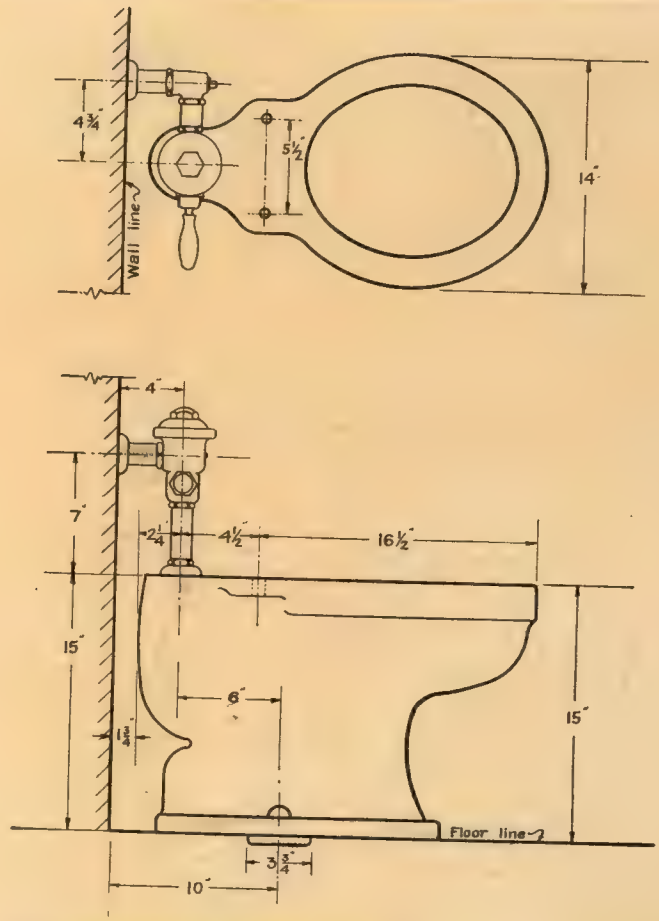

K-3035 V Roughing Measurements

Measurements may vary from ¼ to ½ inch

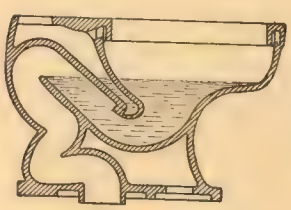

The accompanying illustration shows the cross section of the Madcliff Syphon Jet closet.

MADCLIFF K-3035 S V

White Vitreous China Syphon Jet Closet; Side Inlet, Floor Outlet with Flush Valve

SPECIFICATION:

White Vitreous China Syphon Jet Closet with Side Inlet, Floor Outlet and 1¼- or 1½-inch Brass Spud. Height 15 inches, Opening of Bowl 11x13 inches, Water Surface 10x12 inches and 3-inch Water Seal. Mahogany Finished Seat, no Cover, with heavy N. P. Brass Bar Hinge, White Vitreous China Bolt Caps and N. P. Brass Flush Valve with China Oscillating Handle.

Approximate weight, packed, Closet only, pounds 74
Seat only, pounds 13

Seat substitutions page 188.

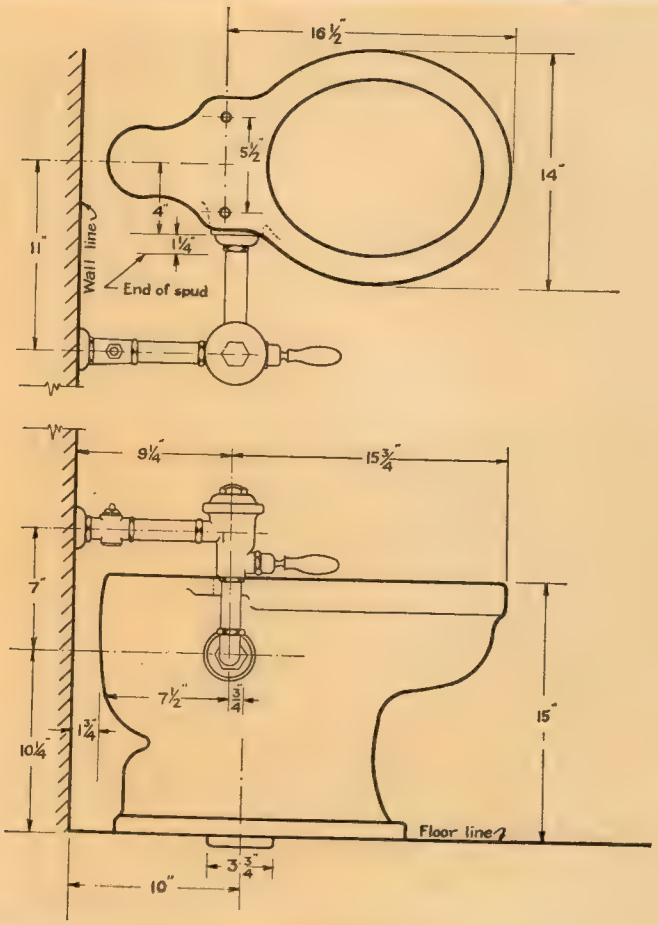

K-3035 S V Roughing Measurements

Measurements may vary from ¼ to ½ inch

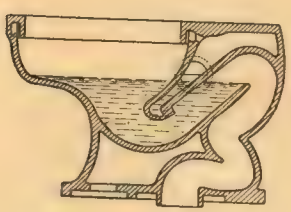

The accompanying illustration shows the cross section of the Madcliff Syphon Jet closet.

MADCLIFF K-3036

White Vitreous China Syphon Jet Closet with Extended Front Lip; Top Inlet, Floor Outlet with K-3111 Tank

SPECIFICATION:

White Vitreous China Syphon Jet Closet with Top Inlet, Floor Outlet, Extended Front Lip and 2-inch Brass Spud. Height 15 inches, Opening of Bowl 11x15 inches, Water Surface 10x13 inches and 3-inch Water Seal. White Celluloid-covered Seat and Cover, open front, with heavy N. P. Brass Bar Hinge. One-piece White Vitreous China Flush Pipe Cover and White Vitreous China Bolt Caps. K-3111 White Vitreous China Tank, fitted with N. P. Brass Flush Connection, Top Side Lever with China Handle and Escutcheon, Heavy Brass Ball Cock, Flush Valve with Large Overflow and ⅜-inch I. P. Size N. P. Brass Supply Pipe to floor with China Handle Stop Valve and China Floor Escutcheon.

Approximate weight, combination packed complete in one crate, pounds	190
Closet only, pounds	78

Seat substitutions page 189.

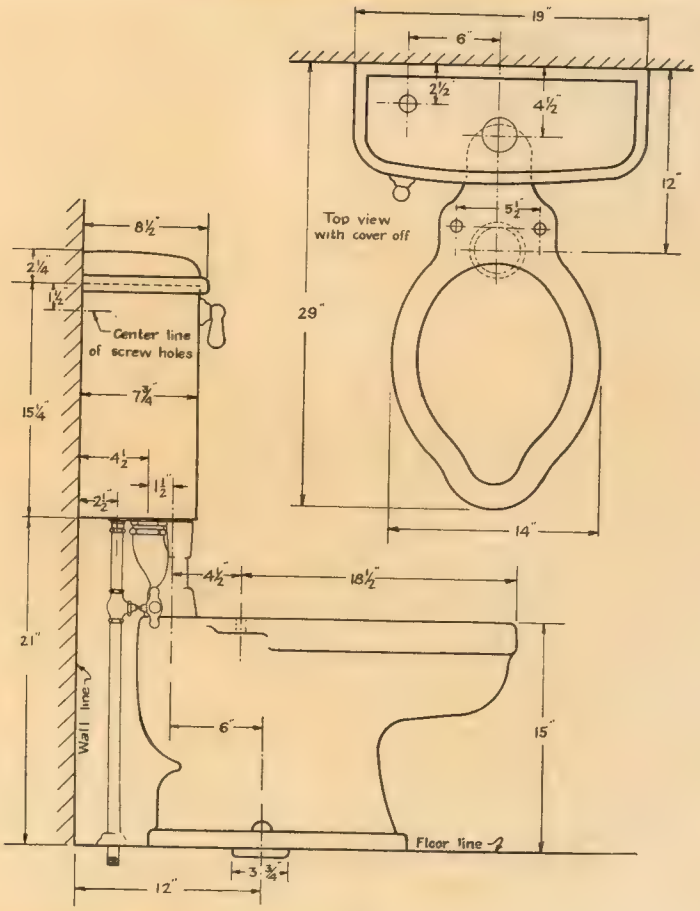

K-3036 Roughing Measurements

Measurements may vary from ¼ to ½ inch

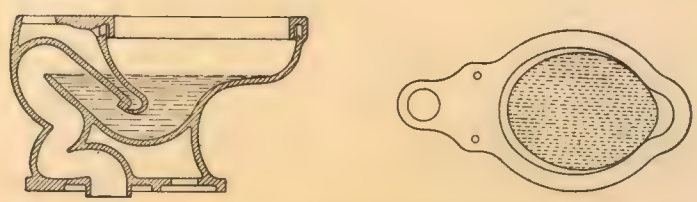

The above illustrations show the cross section and top view of the Madcliff Syphon Jet closet with extended front lip.

MADCLIFF K-3037

White Vitreous China Syphon Jet Closet with Extended Front Lip; Top Inlet, Floor Outlet with K-3111 Tank

SPECIFICATION:

White Vitreous China Syphon Jet Closet with Top Inlet, Floor Outlet, Extended Front Lip and 2-inch Brass Spud. Height 15 inches, Opening of Bowl 11x15 inches, Water Surface 10x13 inches and 3-inch Water Seal. Mahogany Finished Seat and Cover, open front, with heavy N. P. Brass Bar Hinge. One-piece White Vitreous China Flush Pipe Cover and White Vitreous China Bolt Caps. K-3111 White Vitreous China Tank, fitted with N. P. Brass Flush Connection, Top Side Lever with China Handle and Escutcheon, Heavy Brass Ball Cock, Flush Valve with Large Overflow and 3/8-inch I. P. Size N. P. Brass Supply Pipe to floor with China Handle Stop Valve and China Floor Escutcheon.

Approximate weight, combination packed complete in one crate, pounds	190
Closet only, pounds	78

Seat substitutions page 189.

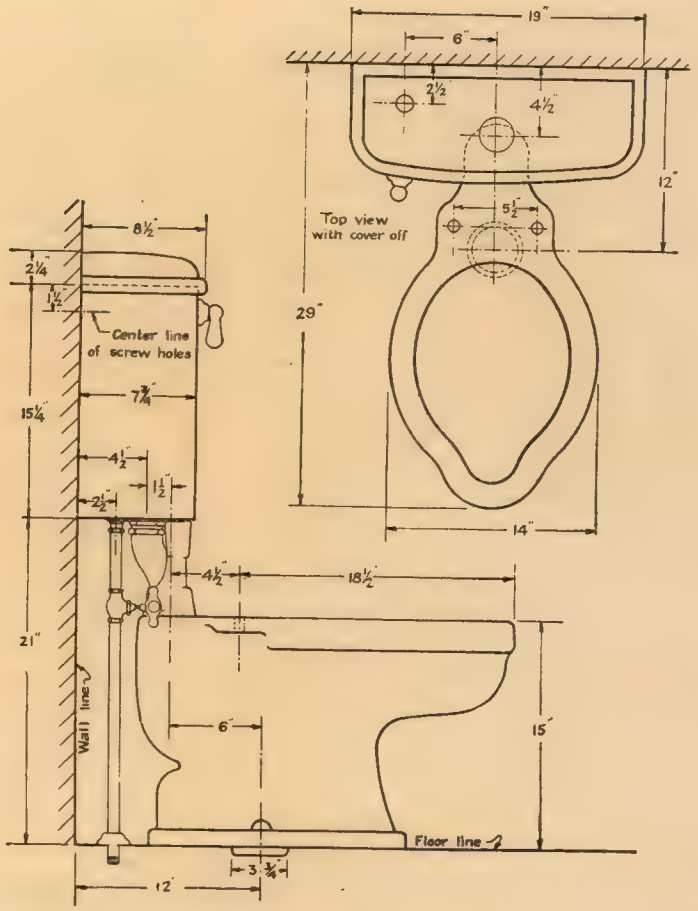

K-3037 Roughing Measurements

Measurements may vary from ¼ to ½ inch

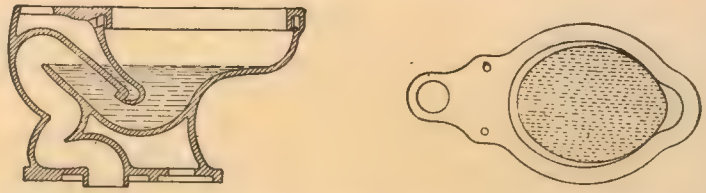

The above illustrations show the cross section and top view of the Madcliff Syphon Jet closet with extended front lip.

MADCLIFF K-3037 V

White Vitreous China Syphon Jet Closet with Extended Front Lip; Top Inlet, Floor Outlet with Flush Valve

SPECIFICATION:

White Vitreous China Syphon Jet Closet with Top Inlet, Floor Outlet, Extended Front Lip and 1¼- or 1½-inch Brass Spud. Height 15 inches, Opening of Bowl 11x15 inches, Water Surface 10x13 inches and 3-inch Water Seal. Mahogany Finished Seat, no Cover, open front, with heavy N. P. Brass Bar Hinge, White Vitreous China Bolt Caps and N. P. Brass Flush Valve with China Oscillating Handle.

Approximate weight, packed, Closet only, pounds 78
Seat only, pounds 14

Seat substitutions page 189.

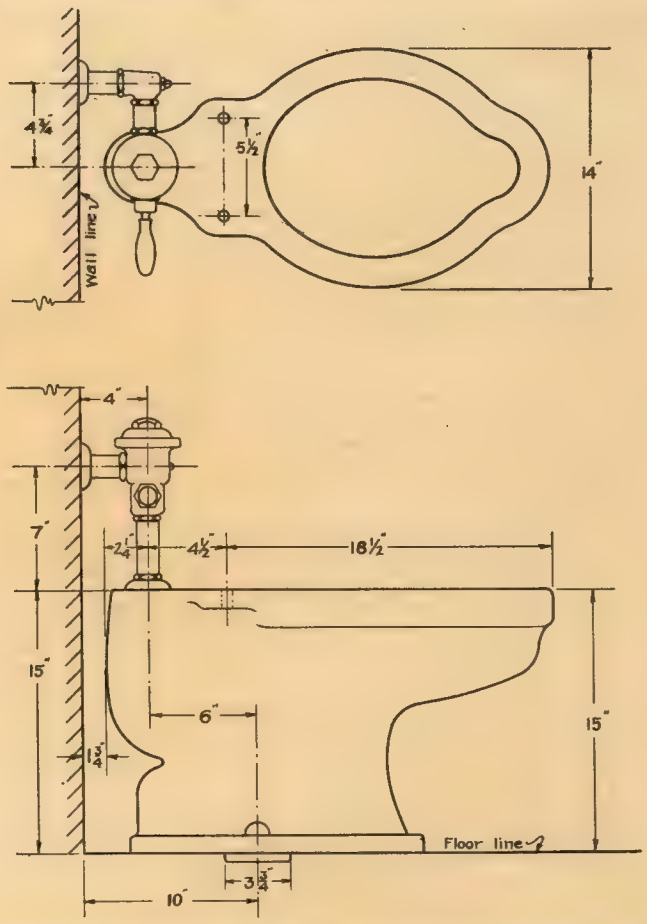

K-3037 V Roughing Measurements

Measurements may vary from ¼ to ½ inch

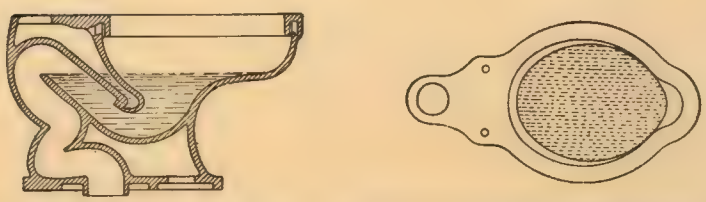

The above illustrations show the cross section and top view of the Madcliff Syphon Jet closet with extended front lip.

MADCLIFF K-3037 S V

White Vitreous China Syphon Jet Closet with Extended Front Lip; Side Inlet, Floor Outlet with Flush Valve

SPECIFICATION:

White Vitreous China Syphon Jet Closet with Side Inlet, Floor Outlet, Extended Front Lip and 1¼- or 1½-inch Brass Spud. Height 15 inches, Opening of Bowl 11x15 inches, Water Surface 10x13 inches and 3-inch Water Seal. Mahogany Finished Seat, no Cover, open front, with heavy N. P. Brass Bar Hinge, White Vitreous China Bolt Caps and N. P. Brass Flush Valve with China Oscillating Handle.

Approximate weight, packed, Closet only, pounds 78
Seat only, pounds 14

Seat substitutions page 189.

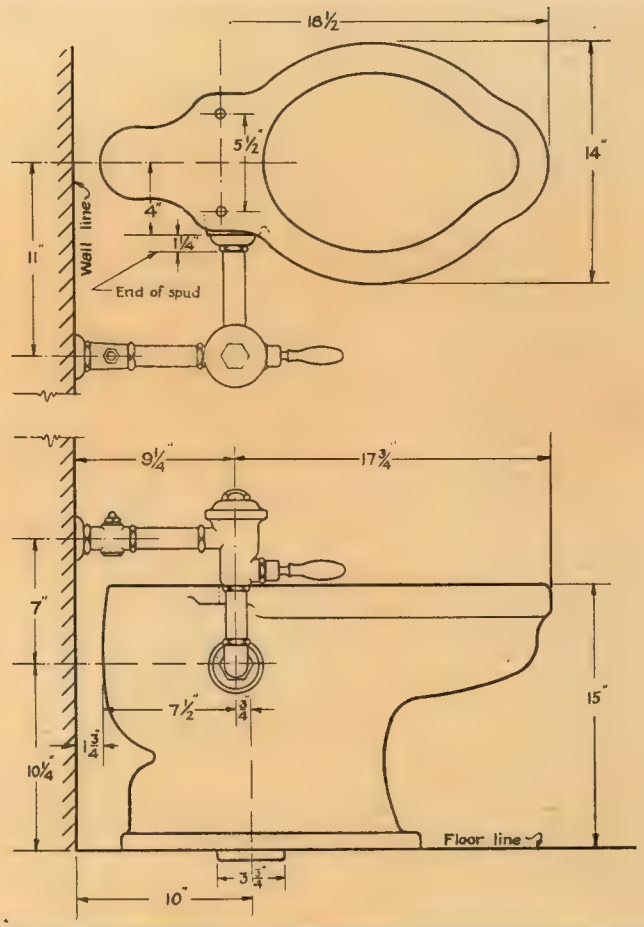

K-3037 S V Roughing Measurements

Measurements may vary from ¼ to ½ inch

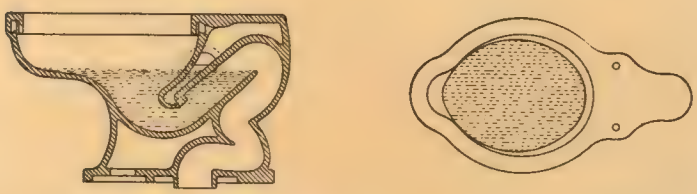

The above illustrations show the cross section and top view of the Madcliff Syphon Jet closet with extended front lip.

MADCLIFF K-3040 V

White Vitreous China Syphon Jet Closet with Extended Front Lip; Top Inlet, Floor Outlet with Seat Action Flush Valve

SPECIFICATION:

White Vitreous China Syphon Jet Closet with Top Inlet, Floor Outlet, Extended Front Lip and 1¼- or 1½-inch Brass Spud. Height 15 inches, Opening of Bowl 11x15 inches, Water Surface 10x13 inches and 3-inch Water Seal. Mahogany Finished Seat, no Cover, open front, with heavy N. P. Brass Bar Hinge, White Vitreous China Bolt Caps and N. P. Brass Seat Action Flush Valve.

Approximate weight, packed, Closet only, pounds 78
Seat only, pounds 14

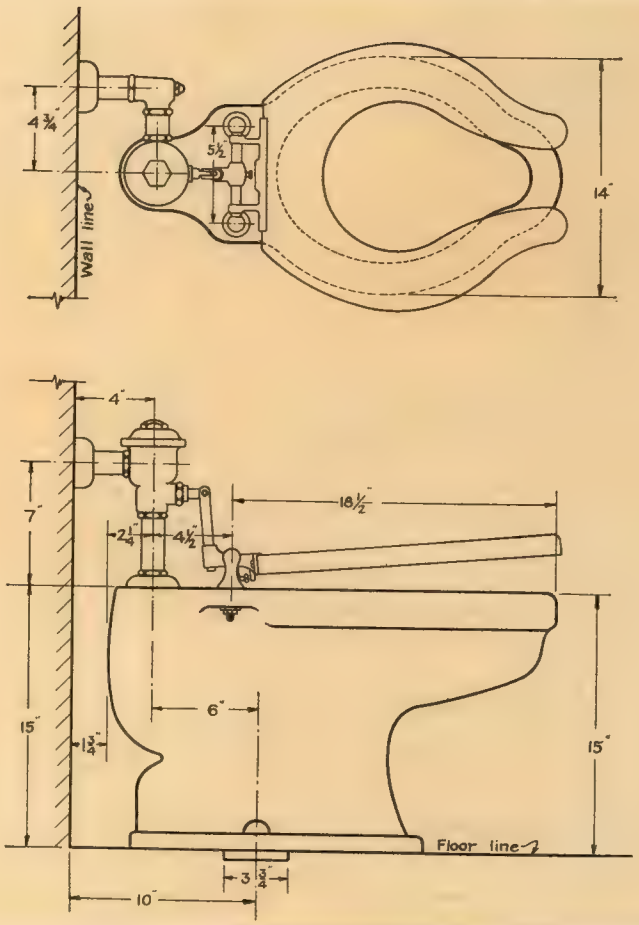

K-3040 V Roughing Measurements

Measurements may vary from ¼ to ½ inch

The above illustrations show the cross section and top view of the Madcliff Syphon Jet closet with extended front lip.

DISCONTINUED

MADCLIFF K-3045

White Vitreous China Syphon Jet Closet with Raised Rear Vent; Top Inlet, Floor Outlet with K-3111 Tank

SPECIFICATION:

White Vitreous China Syphon Jet Closet with Raised Rear Vent, Top Inlet, Floor Outlet and 2-inch Brass Spud. Height 15 inches, Opening of Bowl 11x13 inches, Water Surface 10x12 inches and 3-inch Water Seal. White Celluloid-covered Seat and Cover with heavy N. P. Brass Bar Hinge, One-piece White Vitreous China Flush Pipe Cover and White Vitreous China Bolt Caps. K-3111 White Vitreous China Tank, fitted with N. P. Brass Flush Connection, Top Side Lever with China Handle and Escutcheon, Heavy Brass Ball Cock, Flush Valve with Large Overflow and ⅜-inch I. P. Size N. P. Brass Supply Pipe to wall with China Handle Stop Valve and China Wall Escutcheon.

Approximate weight, packed complete, pounds	185
Closet only, pounds	90

NOTE: This Closet is also made with extended front lip.

Seat substitutions page 188.

MADBROOK K-3050W

MADBROOK K-3050

THOMAS MADDOCK'S SONS COMPANY

MADBROOK K-3055 V

MADE OF

DUROCK

White Vitreous China Reversed Trap Syphon Action Closet with Jet and Elongated Bowl; Back Inlet, Floor Outlet with Flush Valve

SPECIFICATION:

White Vitreous China Reversed Trap Syphon Action Closet with Elongated Bowl and Concealed Twin Jets; Back Inlet, Floor Outlet and 1¼- or 1½-inch Brass Spud. Height 15 inches. Opening of Bowl 10½x15 inches, Water Surface 10x12 inches and 3-inch Water Seal. Mahogany Finished Seat, no Cover, open front, with Concealed Post Hinge, White Vitreous China Bolt Caps and N. P. Brass Flush Valve with China Oscillating Handle.

Approximate weight, packed, Closet only, pounds	66
Seat only, pounds	11

(For roughing measurements, see reverse side)

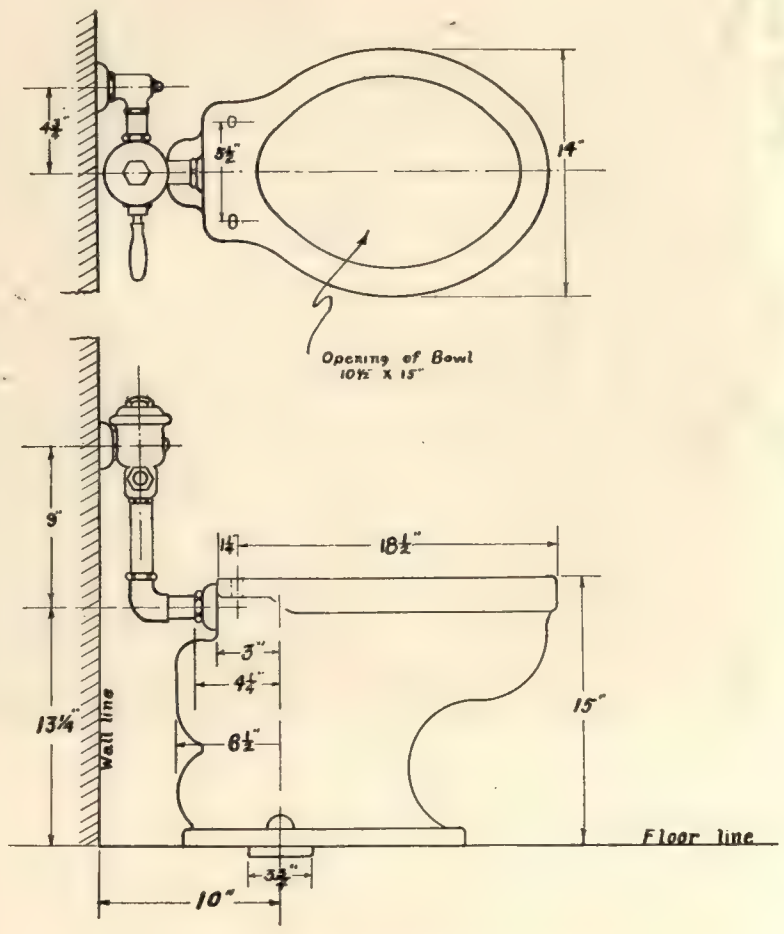

K-3055 V Roughing Measurements

Measurements may vary from ¼ to ½ inch

THOMAS MADDOCK'S SONS COMPANY

MADBROOK K-3055 SV

MADE OF

DUROCK

White Vitreous China Reversed Trap Syphon Action Closet with Jet and Elongated Bowl; Side Inlet, Floor Outlet with Flush Valve

SPECIFICATION:

White Vitreous China Reversed Trap Syphon Action Closet with Elongated Bowl and Concealed Twin Jets; Side Inlet, Floor Outlet and 1¼- or 1½-inch Brass Spud. Height 15 inches, Opening of Bowl 10½x15 inches, Water Surface 10x12 inches and 3-inch Water Seal. Mahogany Finished Seat, no Cover, open front, with Concealed Post Hinge, White Vitreous China Bolt Caps and N. P. Brass Flush Valve with China Oscillating Handle.

Approximate weight, packed, Closet only, pounds	66
Seat only, pounds	11

(For roughing measurements, see reverse side)

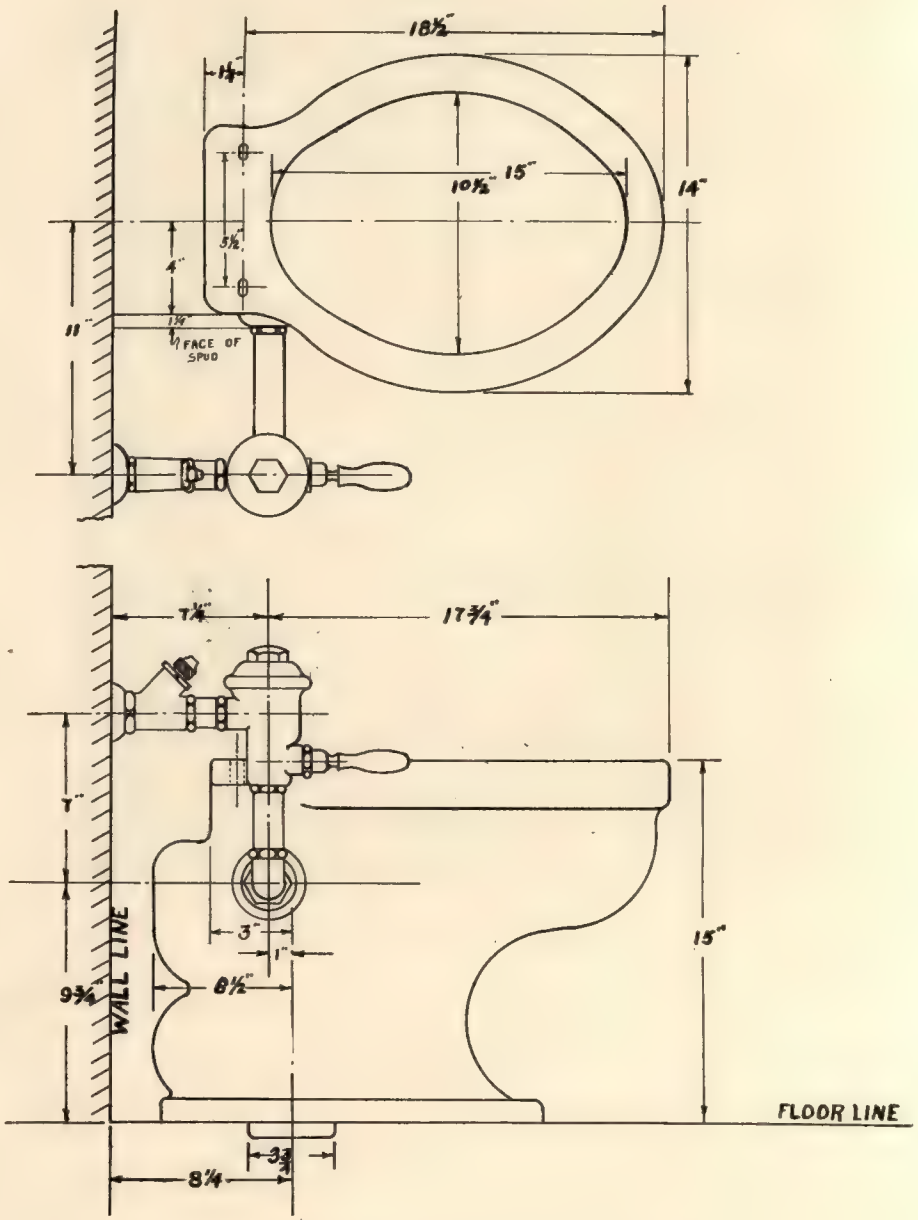

K-3055 SV Roughing Measurements

Measurements may vary from ¼ to ½ inch

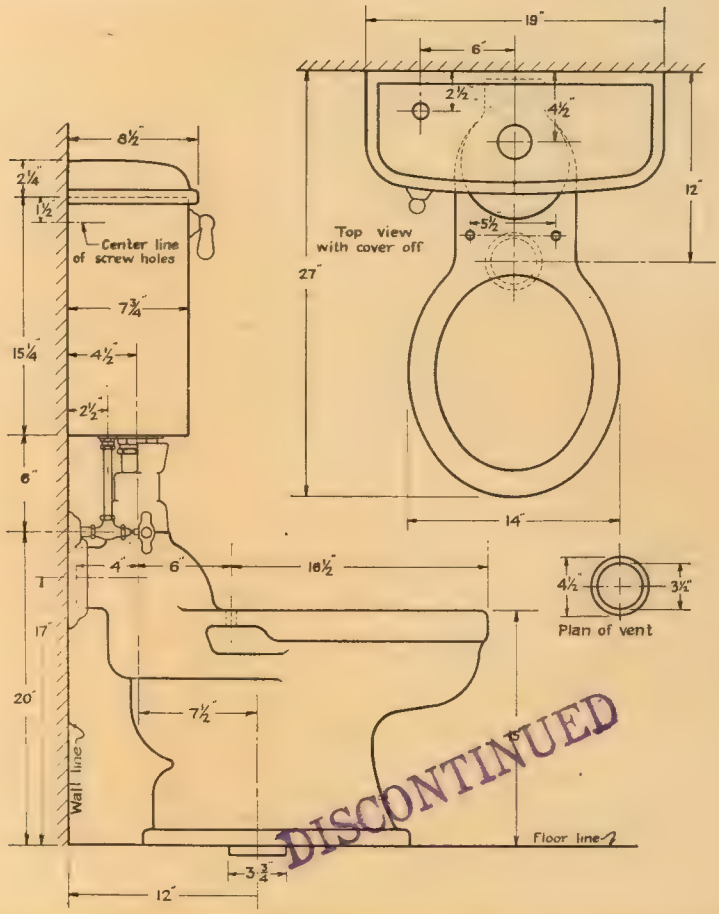

K-3045 Roughing Measurements

Measurements may vary from ¼ to ½ inch

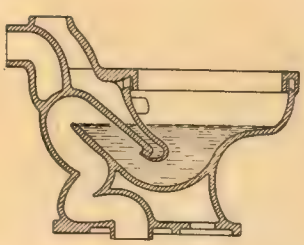

The accompanying illustration shows the cross section of the Madcliff Syphon Jet closet with raised rear vent.

MADEVINE K-3060 V

White Vitreous China Wall Hanging Blow-out Pattern Closet with Extended Front Lip; Top Inlet, Wall Outlet with Flush Valve

SPECIFICATION:

White Vitreous China Wall Hanging Blow-out Pattern Closet with Top Inlet, Wall Outlet, Extended Front Lip and 1¼- or 1½-inch Brass Spud. Opening of Bowl 11x15 inches, Water Surface 10x13 inches and 3-inch Water Seal. Mahogany Finished Seat, no Cover, open front, with heavy N. P. Brass Bar Hinge and N. P. Brass Flush Valve with China Oscillating Handle.

Approximate weight, packed, Closet only, pounds 78
Seat only, pounds 14

Seat substitutions page 189.

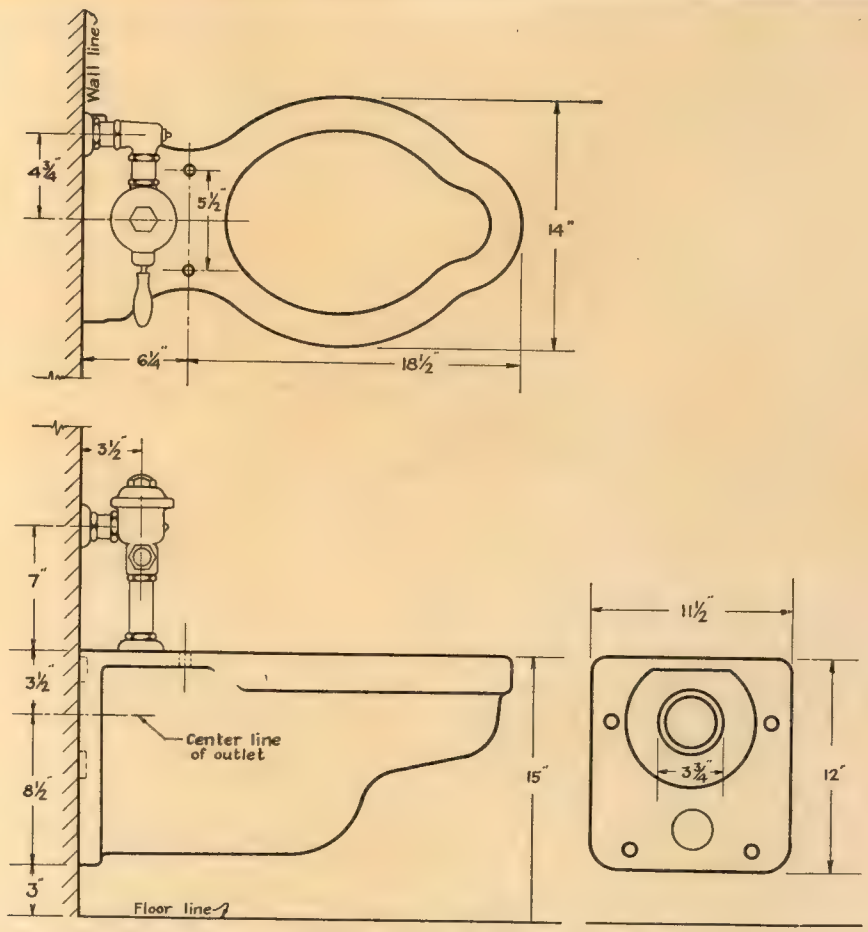

K-3060 V Roughing Measurements

Measurements may vary from ¼ to ½ inch

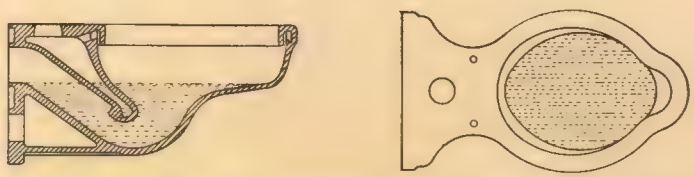

The above illustrations show the cross section and top view of the Madevine blow-out pattern closet.

MADEVINE K-3062 V

White Vitreous China Wall Hanging Blow-out Pattern Closet with Extended Front Lip; Back Inlet, Wall Outlet with Concealed Flush Valve

SPECIFICATION:

White Vitreous China Wall Hanging Blow-out Pattern Closet with Back Inlet, Wall Outlet, Extended Front Lip and 1¼- or 1½-inch Brass Spud. Opening of Bowl 11x15 inches, Water Surface 10x13 inches and 3-inch Water Seal. Mahogany Finished Seat, no Cover, open front, with heavy N. P. Brass Bar Hinge and Concealed Flush Valve with China Oscillating Handle through wall.

Approximate weight, packed, Closet only, pounds 78
Seat only, pounds 14

Seat substitutions page 189.

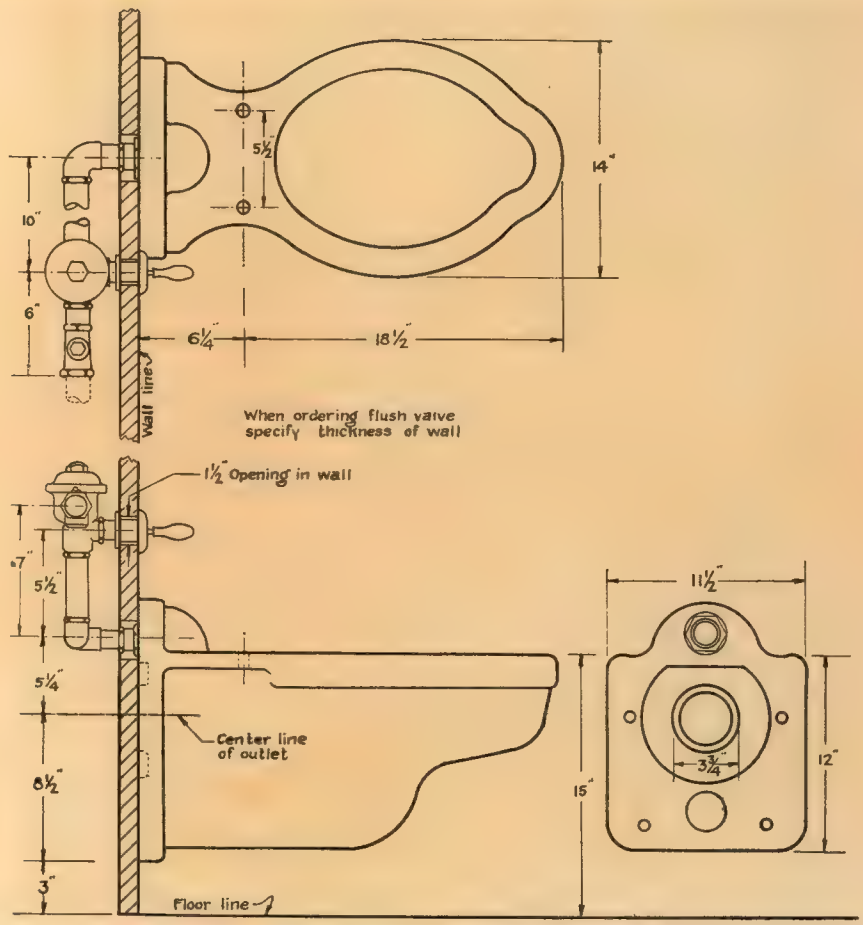

K-3062 V Roughing Measurements

Measurements may vary from ¼ to ½ inch

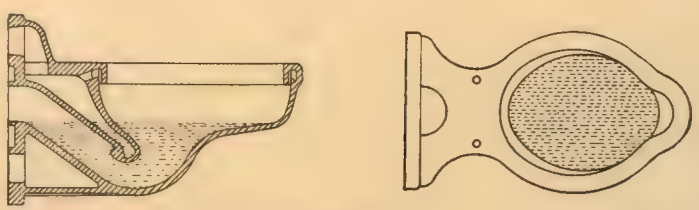

The above illustrations show the cross section and top view of the Madevine blow-out closet.

MADEVINE K-3063 S V

White Vitreous China Wall Hanging Blow-out Pattern Closet with Extended Front Lip; Side Inlet, Wall Outlet with Flush Valve

SPECIFICATION:

White Vitreous China Wall Hanging Blow-out Pattern Closet with Side Inlet, Wall Outlet, Extended Front Lip and 1¼- or 1½-inch Brass Spud. Opening of Bowl 11x15 inches, Water Surface 10x13 inches and 3-inch Water Seal. Mahogany Finished Seat, no Cover, open front, with heavy N. P. Brass Bar Hinge and N. P. Brass Flush Valve with China Oscillating Handle.

Approximate weight, packed, Closet only, pounds 78
Seat only, pounds 14

Seat substitutions page 189.

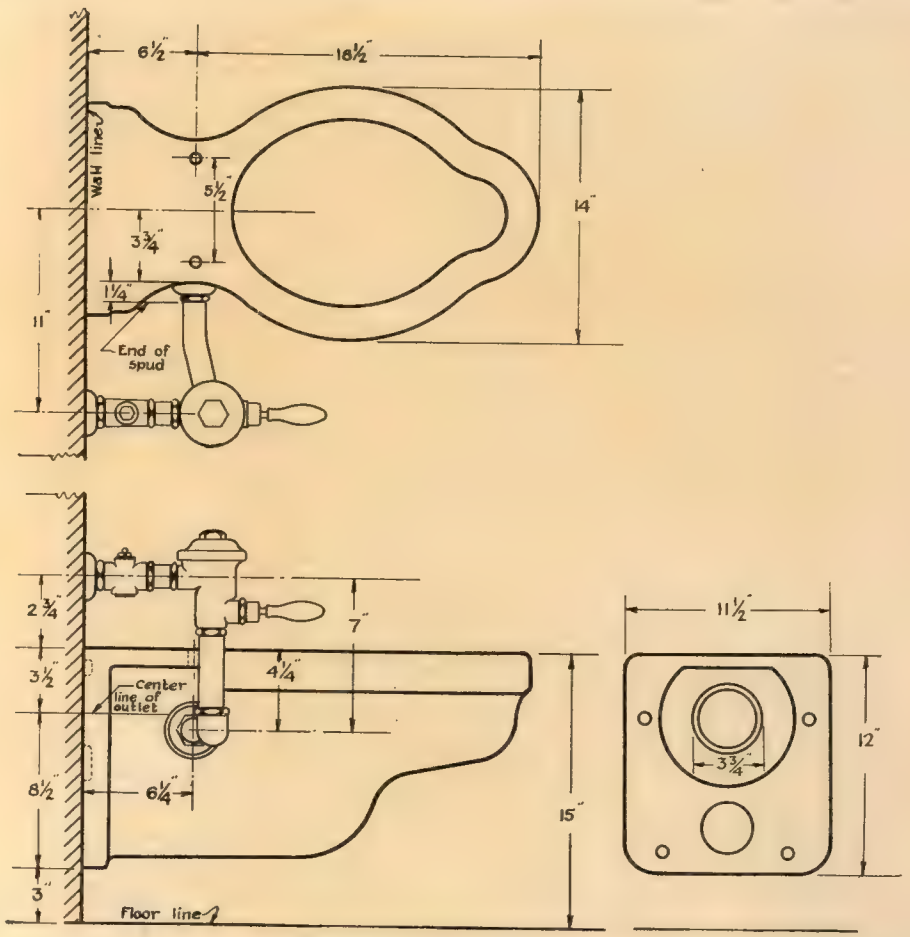

K-3063 S V Roughing Measurements

Measurements may vary from ¼ to ½ inch

The above illustrations show the cross section and top view of the Madevine blow-out pattern closet.

SEATS FOR ARISTON-MADERA SILENT CLOSETS

K-3070

White Celluloid-covered Seat and Cover with Concealed Post Hinge. Also furnished with Mahogany finish.

K-3071

White Celluloid-covered Seat and Cover, open front and back, with heavy White Covered Brass Bar Hinge. Also furnished with Mahogany finish.

K-3072

Mahogany Finished Seat, no Cover, open front and back, with heavy N. P. Brass Bar Hinge. Also furnished with White Celluloid-covered finish.

K-3073

White Celluloid-covered Seat and Cover, open front and back, with Concealed Brass Bar Hinge. Also furnished with Mahogany finish.

K-3074

Mahogany Finished Seat, no Cover, open front and back, with Concealed Brass Bar Hinge. Also furnished with White Celluloid-covered finish.

SEATS FOR MADERNO CLOSETS

K-3075

Mahogany Finished Seat and Cover, open front, with Concealed Post Hinge. Also furnished with White Celluloid-covered finish.

K-3076

Mahogany Finished Seat, no Cover, open front, with Concealed Post Hinge. Also furnished with White Celluloid-covered finish.

K-3077

White Celluloid-covered Seat and Cover with Concealed Post Hinge.

K-3078

Mahogany Finished Seat and Cover with Concealed Post Hinge.

SEATS FOR REGULAR CLOSETS

K-3080

Mahogany Finished Seat and Cover with heavy N. P. Brass Bar Hinge.

K-3081

Mahogany Finished Seat, no Cover, with heavy N. P. Brass Bar Hinge.

K-3082

White Celluloid-covered Seat, no Cover, with heavy N. P. Brass Bar Hinge.

K-3083

White Celluloid-covered Seat and Cover with heavy N. P. Brass Bar Hinge.

SEATS FOR REGULAR CLOSETS WITH LIP

K-3085

Mahogany Finished Seat and Cover, open front, with heavy N. P. Brass Bar Hinge.

K-3086

Mahogany Finished Seat, no Cover, open front, with heavy N. P. Brass Bar Hinge.

K-3087

White Celluloid-covered Seat, no Cover, open front, with heavy N. P. Brass Bar Hinge.

K-3088

White Celluloid-covered Seat and Cover, open front, with heavy N. P. Brass Bar Hinge.

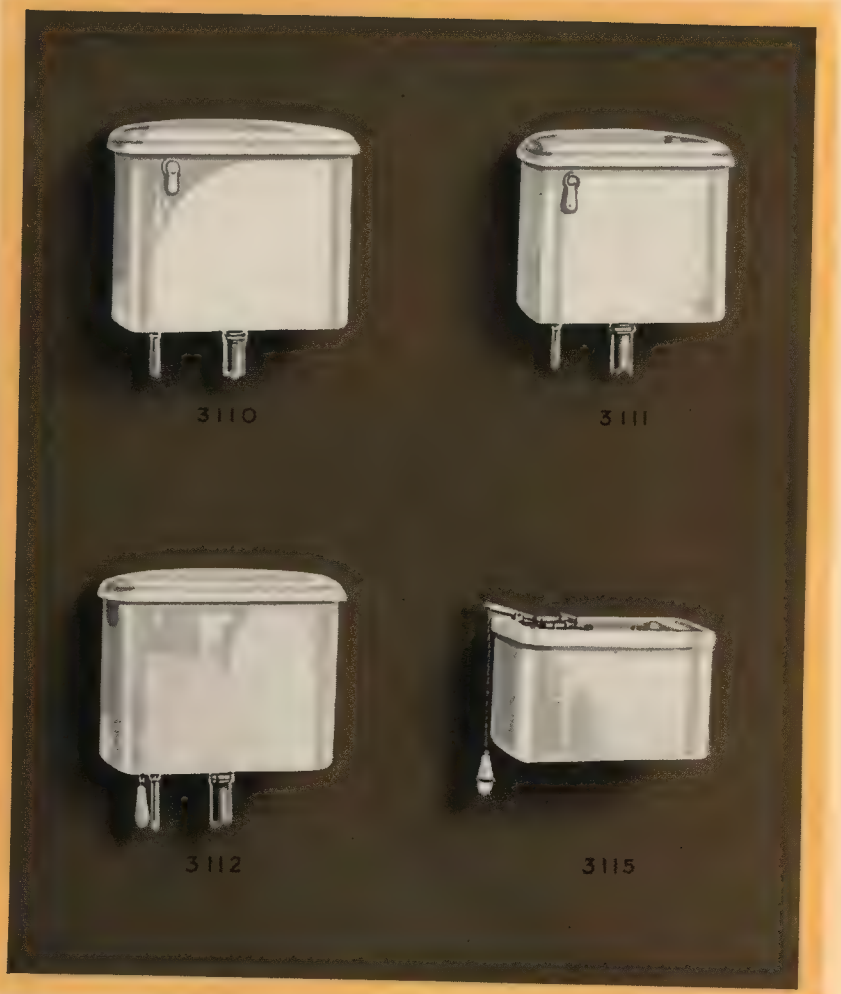

MADORA K-3110

White Vitreous China Straight Front Large Size Tank with Top Side Lever.

Approximate weight, packed complete, pounds . . . 98

MADORA K-3111

White Vitreous China Straight Front Tank with Top Side Lever.

Approximate weight, packed complete, pounds . . . 77

MADORA K-3112

White Vitreous China Straight Front Large Size Tank with Underpull Lever.

Approximate weight, packed complete, pounds . . . 101

MADABECK K-3115

White Vitreous China Straight Front High-up Tank.

Capacity, gallons . 4 6 8

Approximate weight, packed complete, pounds . . . 65 90 105

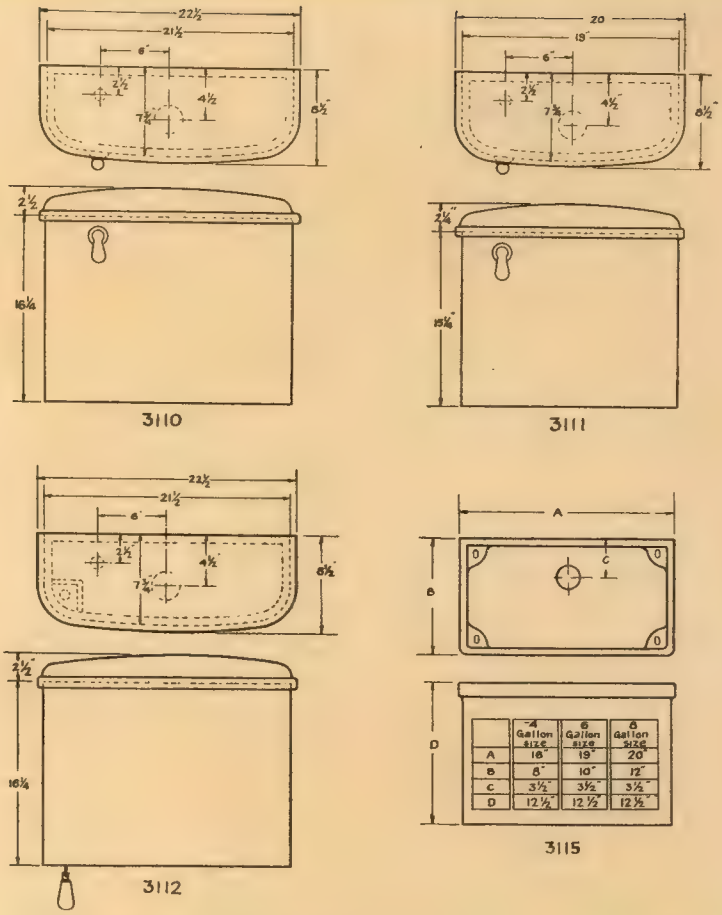

	4 Gallon Size	6 Gallon Size	8 Gallon Size
A	18"	19"	20"
B	8"	10"	12"
C	3½"	3½"	3½"
D	12½"	12½"	12½"

K-3110, K-3111, K-3112 and K-3115
Roughing Measurements
Measurements may vary from ¼ to ½ inch

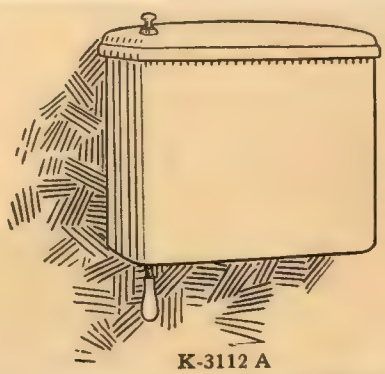

K-3112 A

The accompanying illustration shows the K-3112 Tank equipped with a push button operating lever in the cover.

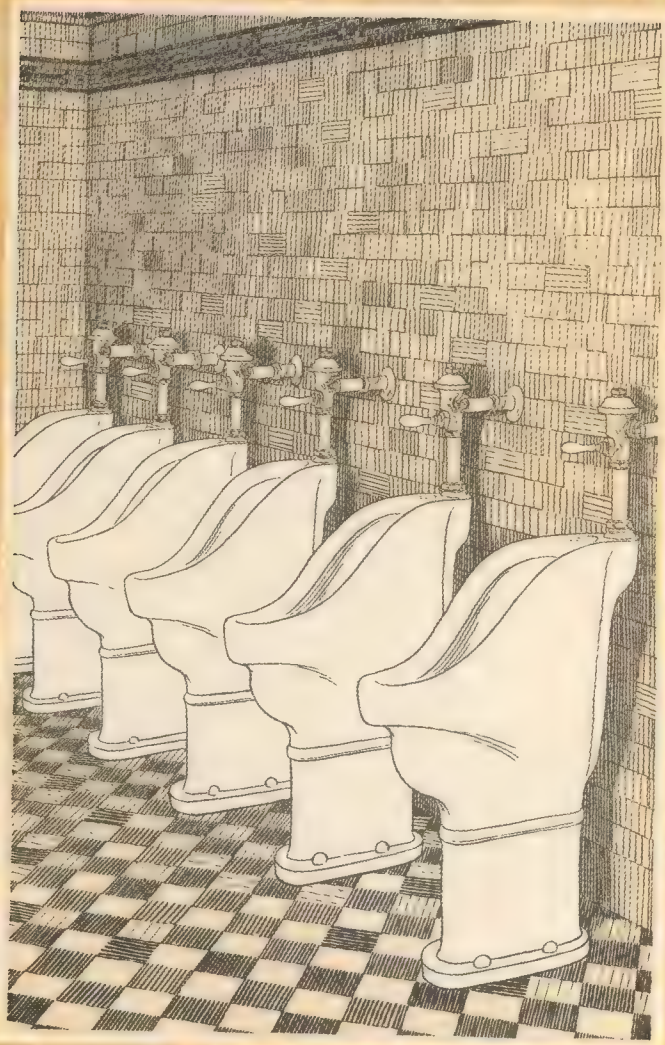

THOMAS MADDOCK

Vitreous China URINALS

Designed to insure cleanliness, sanitation and service

The Madstone Urinal

UNTIL the perfection of the present pedestal type of urinal, many different kinds were tried but each proved unsatisfactory because it was not sanitary. As a result of this dissatisfaction water closets have been used quite generally instead of urinals. While this practice is entirely sanitary, the water closet is too low for convenient use as a urinal.

The perfected type of syphon jet pedestal urinal is constructed the same as a water closet except that it is higher and designed especially for use as a urinal. The lip in front is low enough for convenient use and the back is high enough to prevent soiling.

As the urinal is installed chiefly in public places, it is subjected to hard usage. Therefore, it must be so designed and constructed as to be strong, service-giving and above all else sanitary. The wall hanging type of urinal, since it has only a small outlet, easily becomes clogged with cigar or cigarette butts and other waste material. In fact this type is unsatisfactory because the wall soon becomes fouled and the fixture cannot be properly cleaned.

One type of urinal in general use today is that known as the stall urinal. One advantage of this urinal is that the floor may be drained into it. But this is a costly installation. The use of a regular floor drain is just as effective and it costs much less.

There are a great many points in favor of the Madstone pedestal urinal over the stall type. The most important one is that the Madstone is made of vitreous china. This material is guaranteed not to craze or crack. Therefore, it cannot absorb urine.

The stall urinal is made of a fire clay body and consequently it is liable to crazing which means cracks developing in the glaze. When this happens the soft, porous body under the glaze absorbs urine, giving off a bad odor. This condition can never be corrected because once urine is absorbed by the body it cannot be eliminated and the toilet room becomes ill-smelling and very unsanitary. The urinal itself also becomes discolored.

There are some stall urinals made of vitreous ware. They are of small size and their cost is almost prohibitive. In these, the disadvantages of the fire clay body have been overcome, but they have all the other objectionable features of the stall urinal.

Because of the small opening in the outlet grid, the stall urinal readily becomes clogged and often overflows onto the floor making a most unsanitary and unhealthy condition.

In stall urinal installations there are necessarily a number of seams where the stalls are fitted together. These seams hold dirt and tend to make the urinal unsanitary. In the Madstone pedestal urinal all this is eliminated because the urinal is one individual unit. Since the stall urinal does not carry a body of water, the undiluted urine remains if it is not flushed each time it is used. Thus a bad odor is given off. The Madstone has a body of water 6½ x 6½ inches. Furthermore, it has a flushing rim which encircles the entire top of the urinal, hence, there is no dry urinating surface on the Madstone because the inside walls are thoroughly washed and cleansed at every flush.

The top plan of the Madstone (shown on page 203) illustrates the exceptionally long extension of the lip on the Pedestal urinal as compared with that of the urinal stall. This extension eliminates the wet unsanitary floor generally found in public toilets where stall urinals are used. It also prevents urine from splashing on the shoes and clothing of the user.

The Madstone pedestal urinal is constructed on the same principle as the modern water closet, inasmuch as it is flushed and cleansed by syphonic action. It is the cleanest and best urinal made because all waste matter is removed at each flush. The opening through the trap is as large as that of most water closets and being of a syphon action type, clogging is practically impossible. This is plainly illustrated in the cross-section shown on page 203.

The Madstone is made in two heights, one for adults and the other for children. The larger one is 24 inches from the floor to the top of the front lip and the juvenile height is 18½ inches. The juvenile height Madstone is ideal for use in schools where children are apt to throw refuse in the urinal. Having a full 2-inch trap opening it will not become stopped up.

There is as much need for a urinal for women as for men. The danger of spreading disease from sitting on unsanitary water closet seats applies equally to both sexes. The juvenile height Madstone is the only urinal made for use by women. Being only 18½ inches from the floor to the top of the front lip, women can use it comfortably without getting any part of the body against the urinal and without disarranging the clothing. The long, narrow, extended lip eliminates the possibility of getting urine on the floor.

Being installed in the same manner as a water closet, the installation cost of the Madstone is kept at a minimum. Considering the necessary piping and other fittings and the cost of installation, the pedestal urinal is less costly than the stall type.

MADESTA K-3201 V

White Vitreous China Syphon Jet Flat Back Urinal with Lip and Flushing Rim; Top Inlet, Wall Outlet with Flush Valve

SPECIFICATION:

White Vitreous China Flat Back Syphon Jet Urinal with Lip, Flushing Rim, Top Inlet and Wall Outlet. Fitted with 1-inch N. P. Brass Inlet Spud, 2-inch Brass Female Outlet Connection and N. P. Brass Flush Valve with China Oscillating Handle.

Approximate weight, packed, Urinal only, pounds 68

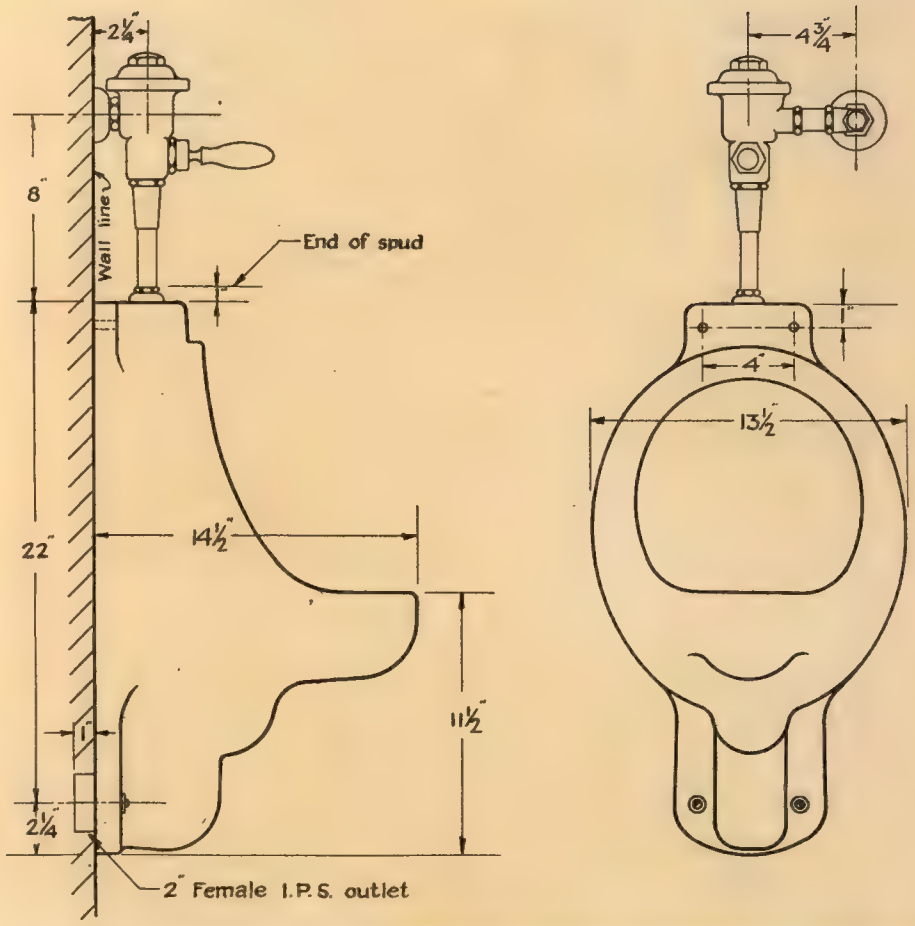

K-3201 V Roughing Measurements

Measurements may vary from ¼ to ½ inch

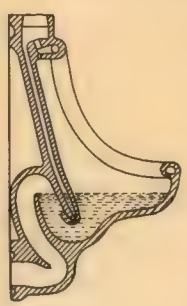

The accompanying illustration shows the cross section of the Madesta syphon jet urinal.

MADVANCE K-3208

White Vitreous China Flat Back Urinal with Lip and Flushing Rim

SPECIFICATION:

White Vitreous China Flat Back Urinal with Lip, Flushing Rim, Integral Strainer, Top Inlet and Bottom Outlet with Horn Connections.

Approximate weight, packed, Urinal only, pounds 38

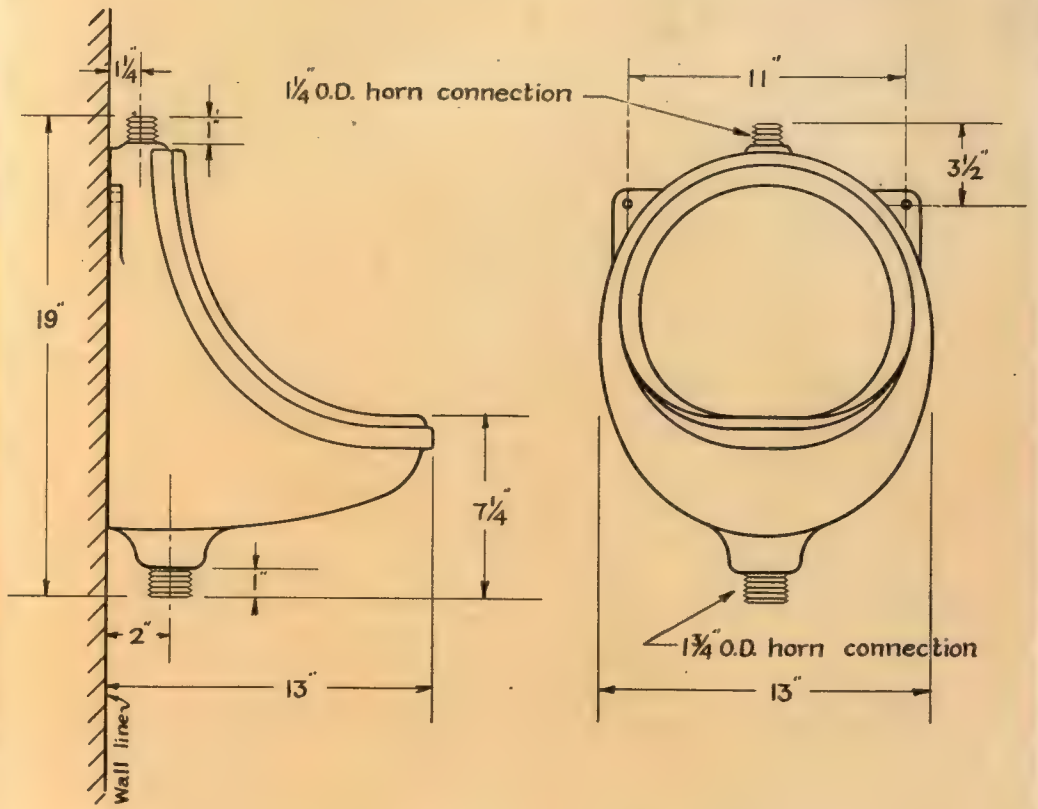

K-3208 Roughing Measurements

Measurements may vary from ¼ to ½ inch

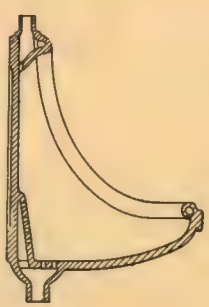

The accompanying illustration shows the cross section of the Madvance urinal.

DISCONTINUED

Also Price K-3210

MADSTONE K-3210

White Vitreous China Syphon Jet Pedestal Urinal with Extended Lip; Back Inlet, Floor Outlet with K-3115 Tank

SPECIFICATION:

White Vitreous China Syphon Jet Pedestal Urinal with Back Inlet, Floor Outlet, High Back, Extended Front Lip, Flushing Rim and 1¼- or 1½-inch Brass Spud. Opening of Bowl 10x18 inches, Water Surface 6½x6½ inches and 3-inch Water Seal. Water-way through trap same size as Water Closet. White Vitreous China Bolt Caps. K-3115 White Vitreous China High Tank, fitted with N. P. Brass Flush Pipe, N. P. Brass Chain with China Handle, Heavy Brass Ball Cock and Flush Valve and N. P. Brass Tank Supports.

Approximate weight, packed complete, pounds	240
Urinal only, pounds	118

THOMAS MADDOCK'S SONS COMPANY

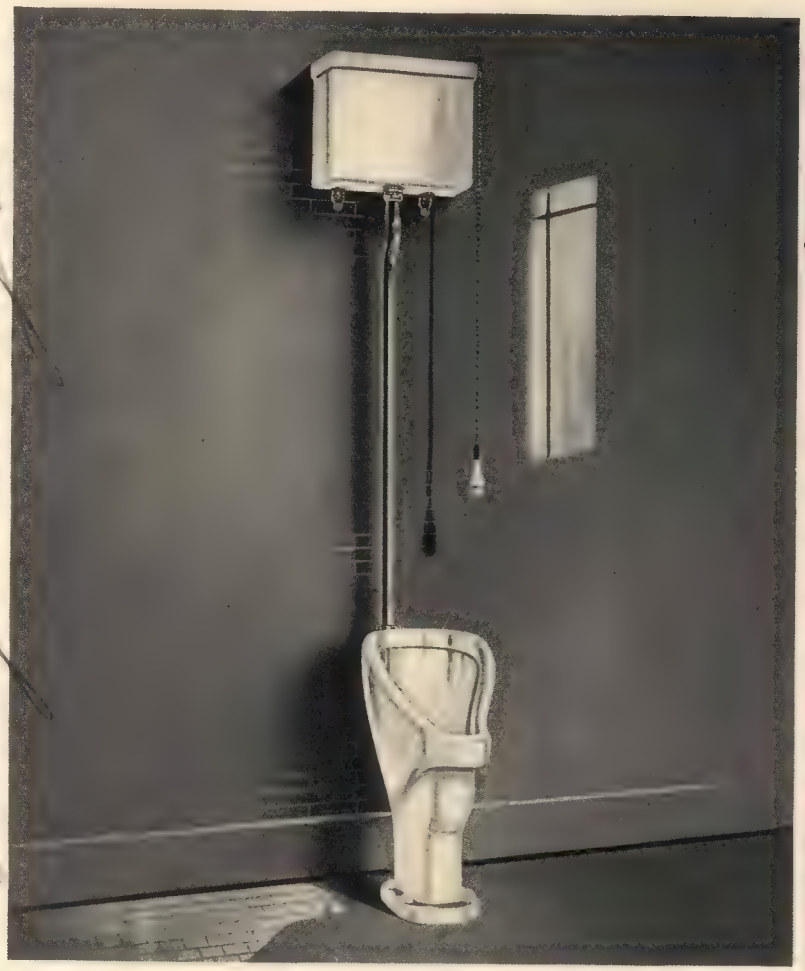

MADSTONE K-3210

MADE OF

DUROCK

White Vitreous China Syphon Jet Pedestal Urinal with Extended Lip; Back Inlet, Floor Outlet with K-3115 Tank

SPECIFICATION:

White Vitreous China Syphon Jet Pedestal Urinal with Back Inlet, Floor Outlet, High Back, Extended Front Lip, Flushing Rim and 1¼- or 1½-inch Brass Spud. Opening of Bowl 10x18 inches, Water Surface 6½x6½ inches and 3-inch Water Seal. Water-way through trap same size as Water Closet. White Vitreous China Bolt Caps. K-3115 White Vitreous China High Tank, fitted with N. P. Brass Flush Pipe, N. P. Brass Chain with China Handle, Heavy Brass Ball Cock and Flush Valve and N. P. Brass Tank Supports.

Approximate weight, packed complete, pounds.....195
Urinal only, pounds.....100

(For roughing measurements, see reverse side)

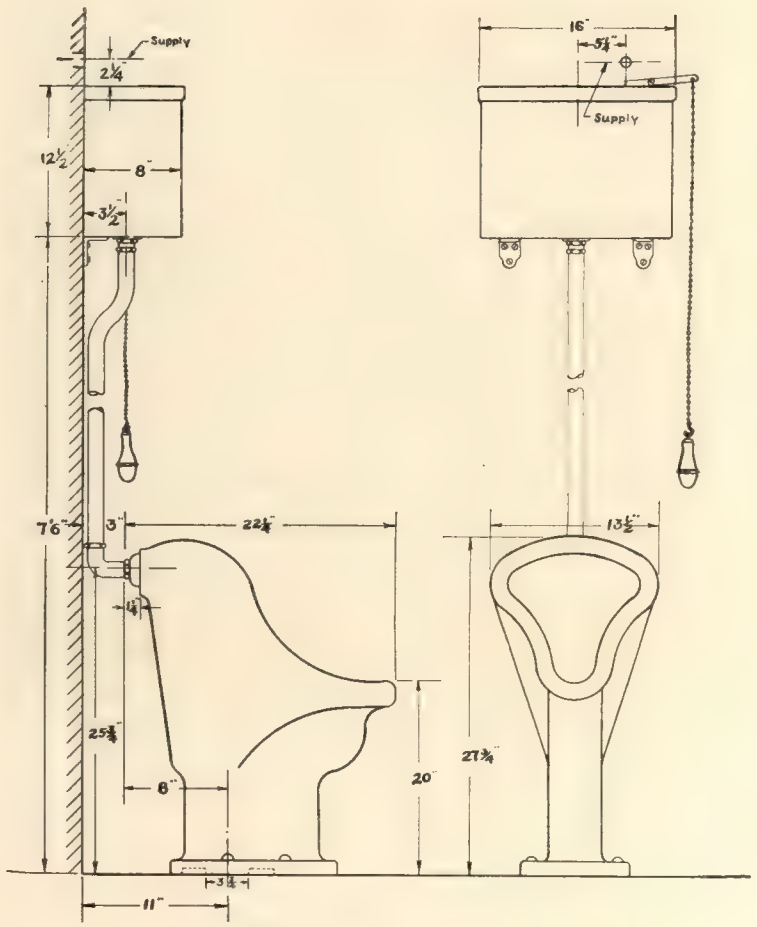

K-3210 Roughing Measurements

Measurements may vary from ¼ to ½ inch

MADSTONE K-3211V

THOMAS MADDOCK'S SONS COMPANY

MADSTONE K-3212 V

MADE OF

DUROCK

White Vitreous China Syphon Jet Pedestal Urinal with Extended Lip; Back Inlet, Floor Outlet with Concealed Flush Valve

SPECIFICATION:

White Vitreous China Syphon Jet Pedestal Urinal with Back Inlet, Floor Outlet, High Back, Extended Front Lip, Flushing Rim and 1¼- or 1½-inch Brass Spud. Opening of Bowl 10x18 inches, Water Surface 6½x6½ inches and 3-inch Water Seal. Water-way through Trap same size as Water Closet. White Vitreous China Bolt Caps and Concealed Flush Valve with China Oscillating Handle through wall.

Approximate weight, packed, Urinal only, pounds..... 100

(For roughing measurements, see reverse side)

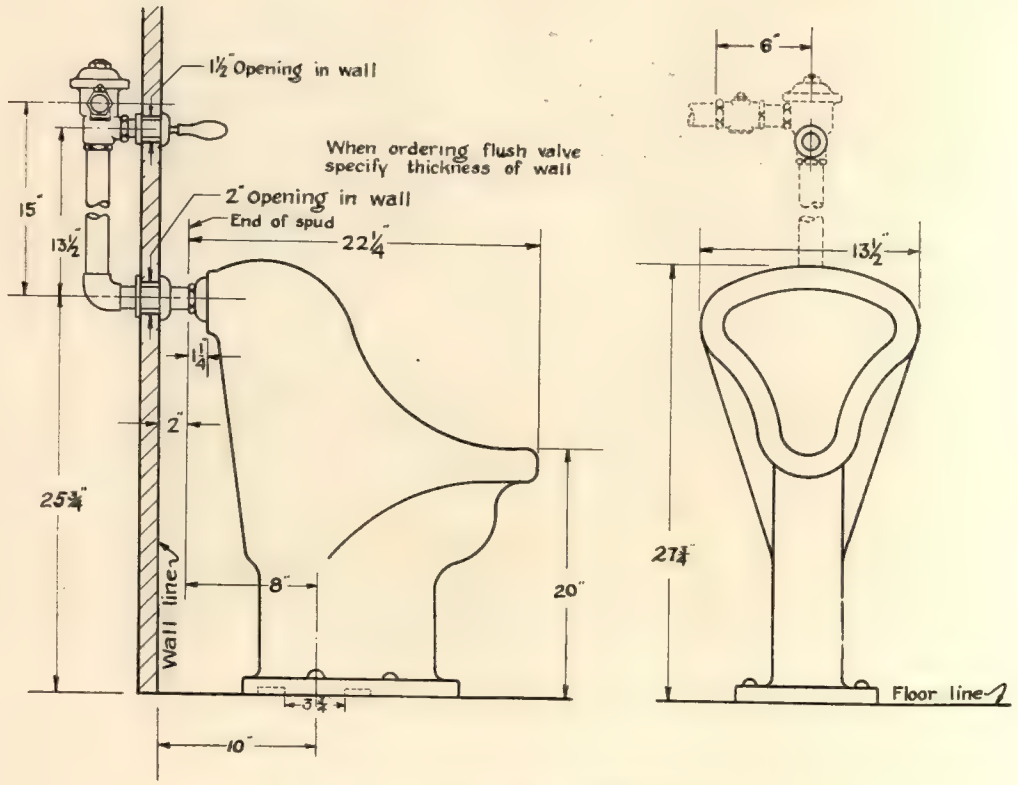

K-3212 V Roughing Measurements

Measurements may vary from ¼ to ½ inch

MADSTONE K-3214V

THOMAS MADDOCK'S SONS COMPANY

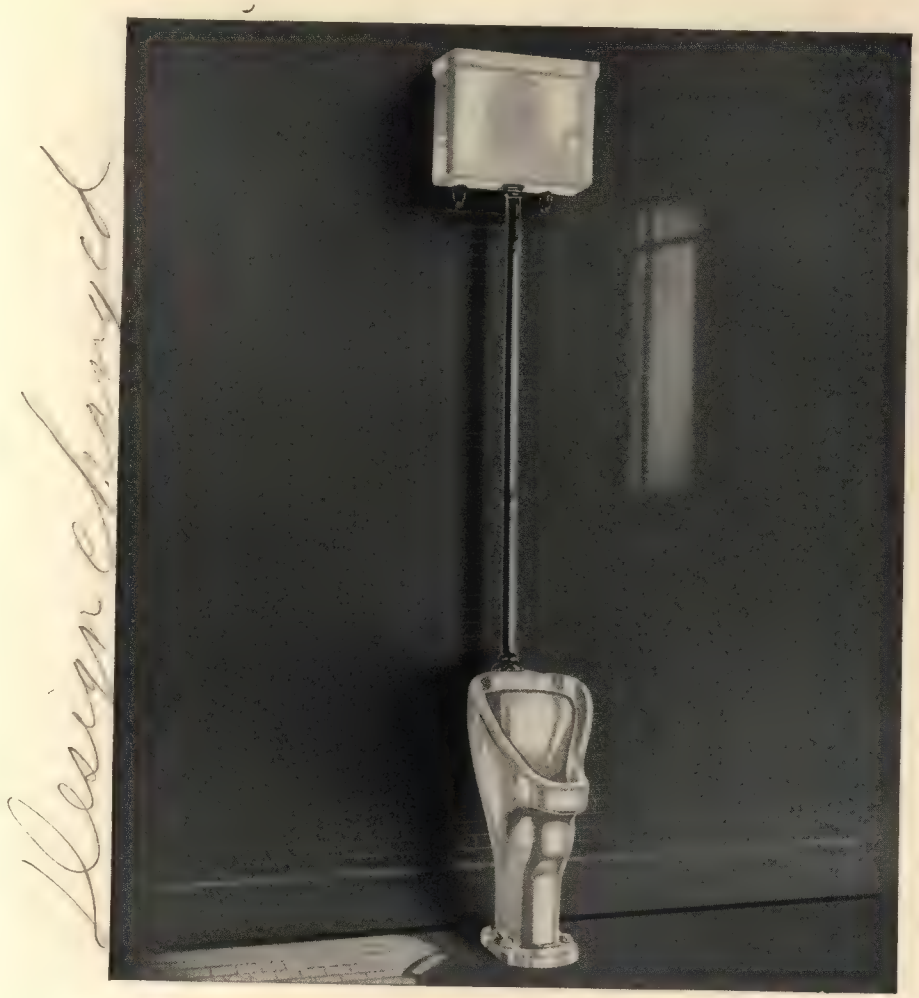

MADSTONE K-3215

MADE OF

DUROCK

White Vitreous China Syphon Jet Pedestal Urinal with Extended Lip; Top Inlet, Floor Outlet with K-3115 Tank

SPECIFICATION:

White Vitreous China Syphon Jet Pedestal Urinal with Top Inlet, Floor Outlet, High Back, Extended Front Lip, Flushing Rim and 1¼- or 1½-inch Brass Spud. Opening of Bowl 10x18 inches, Water Surface 6½x6½ inches and 3-inch Water Seal. Water-way through trap same size as Water Closet. White Vitreous China Bolt Caps. K-3115 White Vitreous China High Tank, fitted with N. P. Brass Flush Pipe, Heavy Brass Control Cock, Automatic Flush Valve and N. P. Brass Tank Supports.

Approximate weight, packed complete, pounds	195
Urinal only, pounds	100

(For roughing measurements, see reverse side)

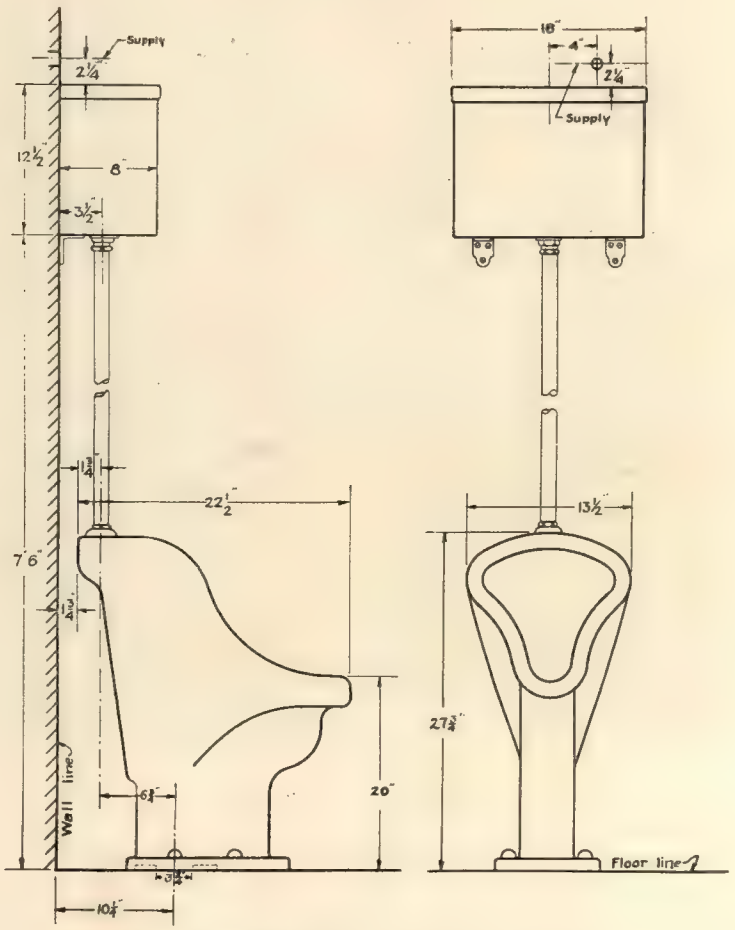

K-3215 Roughing Measurements

Measurements may vary from ¼ to ½ inch

MADSTONE WALL K-3230V

MADSTONE-WALL K-3235V

MADSTONE-WALL K-3240V

THOMAS MADDOCK

Vitreous China SLOP SINKS

Built to withstand the hardest kind of usage

MADIATOR K-3308

White Vitreous China Slop Sink with Integral Back and Vitreous China Floor Outlet Trap Standard

SPECIFICATION:

White Vitreous China Slop Sink with 13-inch Integral Back; Size 18x22 inches, with White Vitreous China Trap Standard with Floor Outlet and Cleanout Plug, N. P. Brass Outlet Strainer and Plug connecting Sink and Trap Standard. Fitted with ¾-inch N. P. Brass Compression Faucets with China Indexed Handles.

DIMENSIONS:

Sink, inches	18x22
Approximate weight, packed, Sink only, pounds	220
Sink and Trap, pounds	245

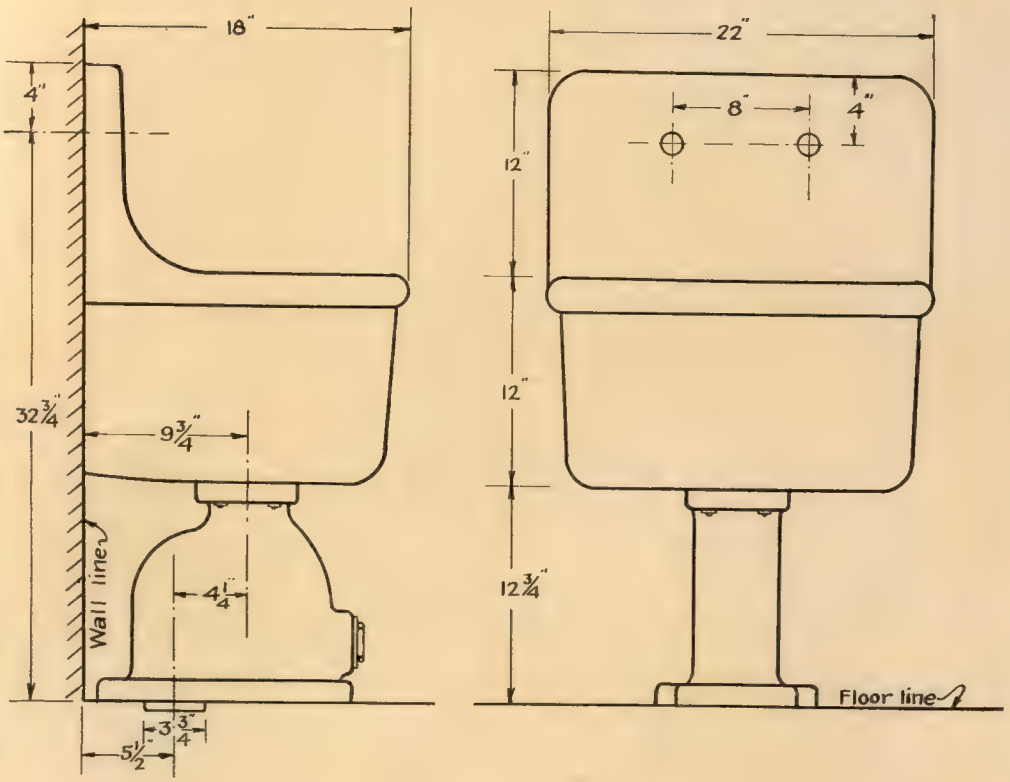

K-3308 Roughing Measurements

Measurements may vary from ¼ to ½ inch

Slop sinks should be made of vitreous china rather than any other material because of the hard usage to which they are subjected.

MADAGON K-3312

White Vitreous China Syphon Jet Slop Sink with Flushing Rim and Integral Trap; Top Inlet and Floor Outlet

SPECIFICATION:

White Vitreous China Syphon Jet Slop Sink with Flushing Rim and Integral Trap; Size 18x18 inches, with Top Inlet and Floor Outlet. Water Surface 12x12 inches and 3-inch Water Seal. Fitted with N. P. Brass Combination Supply Fixture with Compression Valves with China Indexed Handles and Supply Nozzle with pail hook. White Vitreous China Bolt Caps. K-3115 White Vitreous China High Tank, fitted with N. P. Brass Flush Pipe, N. P. Brass Chain with China Handle, Heavy Brass Ball Cock and Flush Valve and N. P. Brass Tank Supports.

DIMENSIONS:

Sink, inches	18x18
Approximate weight, packed, Sink only, pounds	135

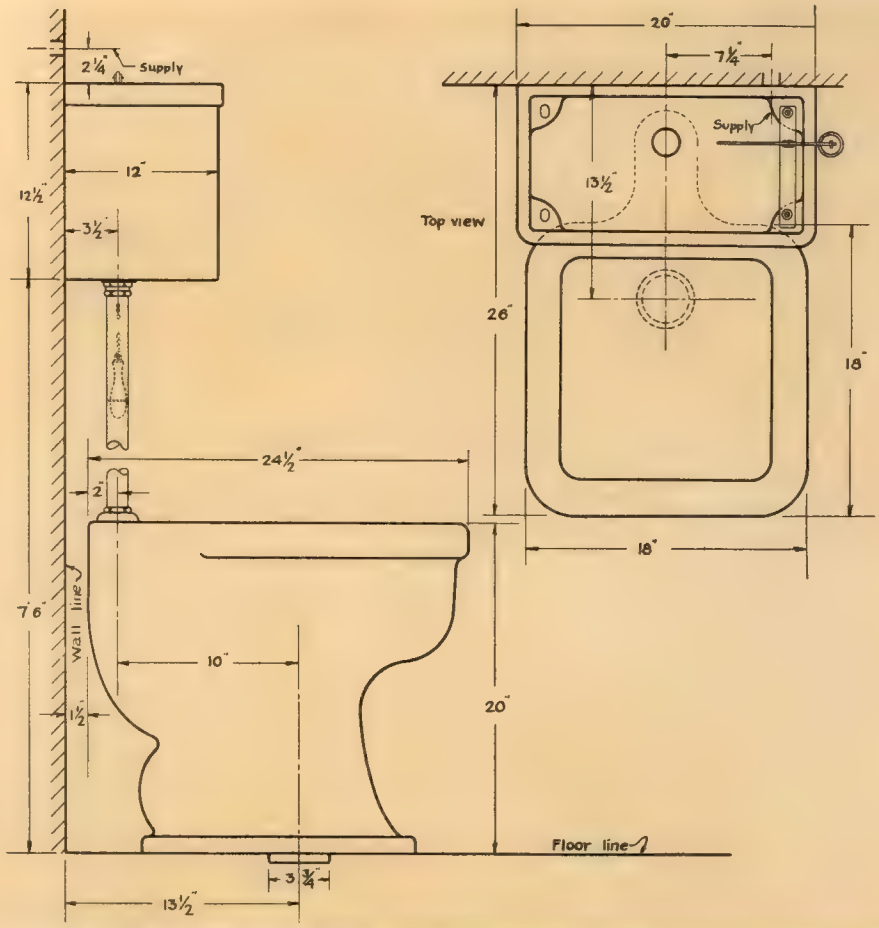

K-3312 Roughing Measurements

Measurements may vary from ¼ to ½ inch

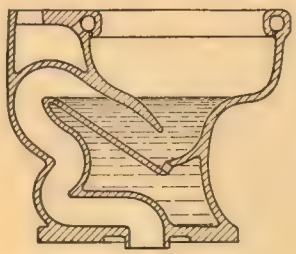

The accompanying illustration shows the cross section of the Madagon syphon jet slop sink.

MADWIN K-3316

White Vitreous China All Roll Rim Slop Sink with Adjustable Enameled Iron Wall Outlet Trap Standard

SPECIFICATION:

White Vitreous China All Roll Rim Slop Sink; Size 18x22 inches, with Iron-enameled, inside and outside, Adjustable Trap Standard with Wall Outlet and Cleanout Plug, N. P. Brass Outlet Strainer and Plug connecting Sink and Trap Standard. Fitted with ¾-inch Female N. P. Brass Combination Compression Supply Fixture with China Indexed Handles and Supply Nozzle with pail hook.

DIMENSIONS:

Sink, inches	18x22
Approximate weight, packed, Sink only, pounds	130
Sink and Trap, pounds	160

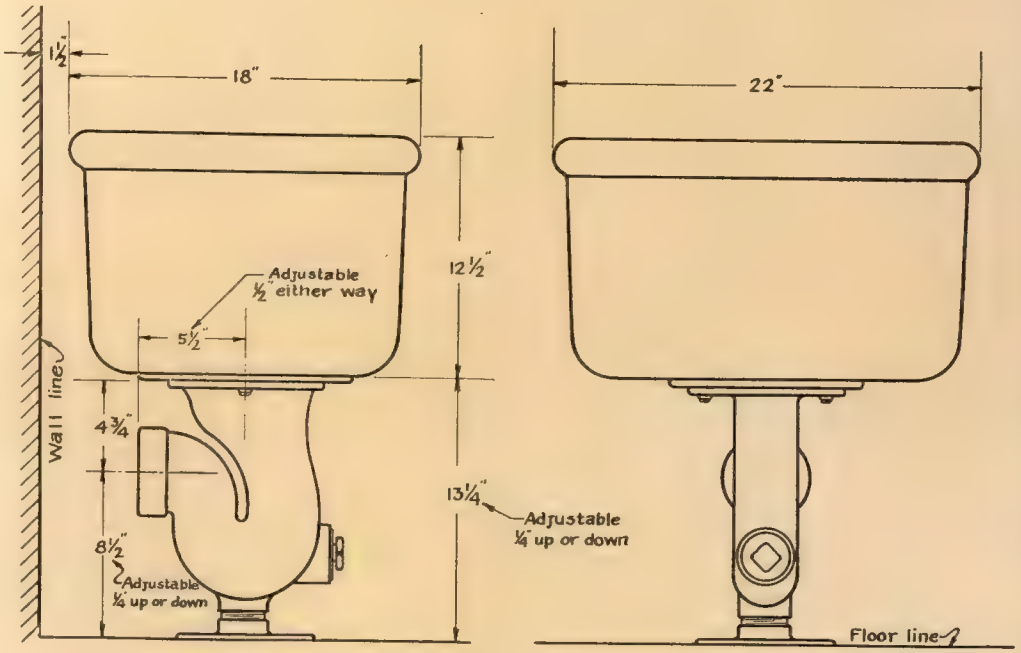

K-3316 Roughing Measurements

Measurements may vary from ¼ to ½ inch

Slop sinks should be made of vitreous china rather than any other material because of the hard usage to which they are subjected.

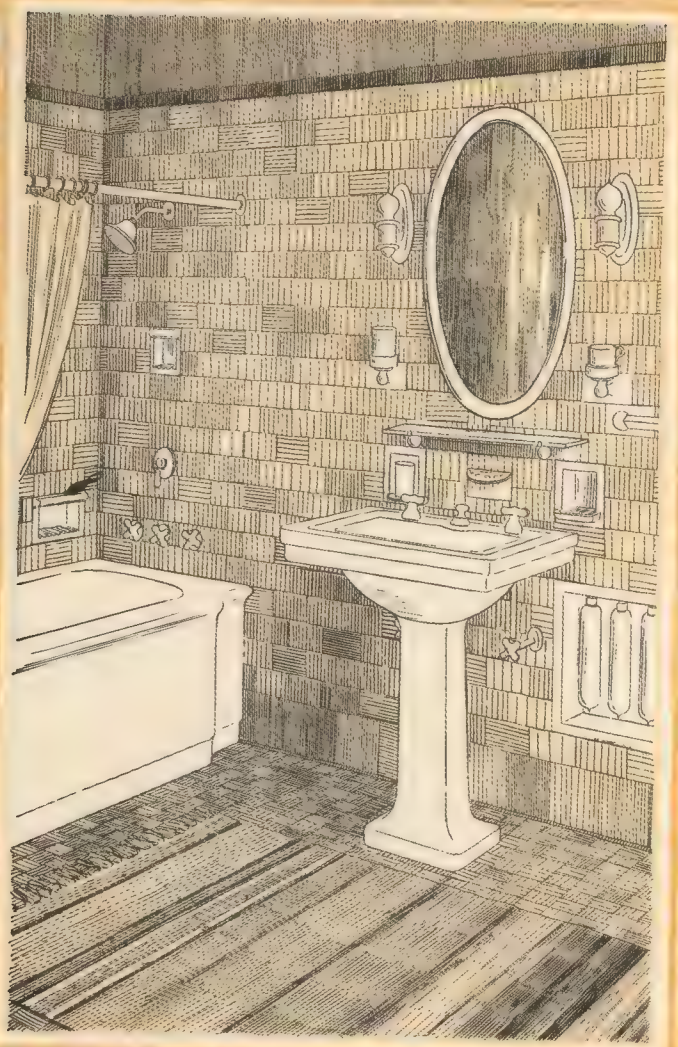

THOMAS MADDOCK

Vitreous China SPECIALTIES

For maximum service and satisfaction

WHITE VITREOUS CHINA BATHROOM ACCESSORIES

K-615	Wall Hanging Soap Dish
K-639	Robe Hook
K-640	Roll Toilet Paper Holder
K-641	Roll Toilet Paper Holder, with spring bar
K-648	Mug and Holder
K-649	Vase and Holder
K-650	Soap Dish and Holder
K-654	Sponge Holder
K-656	18″x5″ Shelf and Brackets
	24″x5″ Shelf and Brackets
	30″x5″ Shelf and Brackets
	36″x5″ Shelf and Brackets
K-658	Combination Shelf, Mug and Vase
K-659	12″x1 1/4″ Grab Rail and Brackets
K-660	18″x1″ Towel Bar and Brackets
	24″x1″ Towel Bar and Brackets
	30″x1″ Towel Bar and Brackets
	36″x1″ Towel Bar and Brackets
K-666	Combination Tumbler and Tooth Brush Holder
K-673	18″x 3/4″ Towel Bar and Brackets
	24″x 3/4″ Towel Bar and Brackets
K-674	18″x 1/2″ Towel Bar and Brackets
	24″x 1/2″ Towel Bar and Brackets
K-681	Small Robe Hook

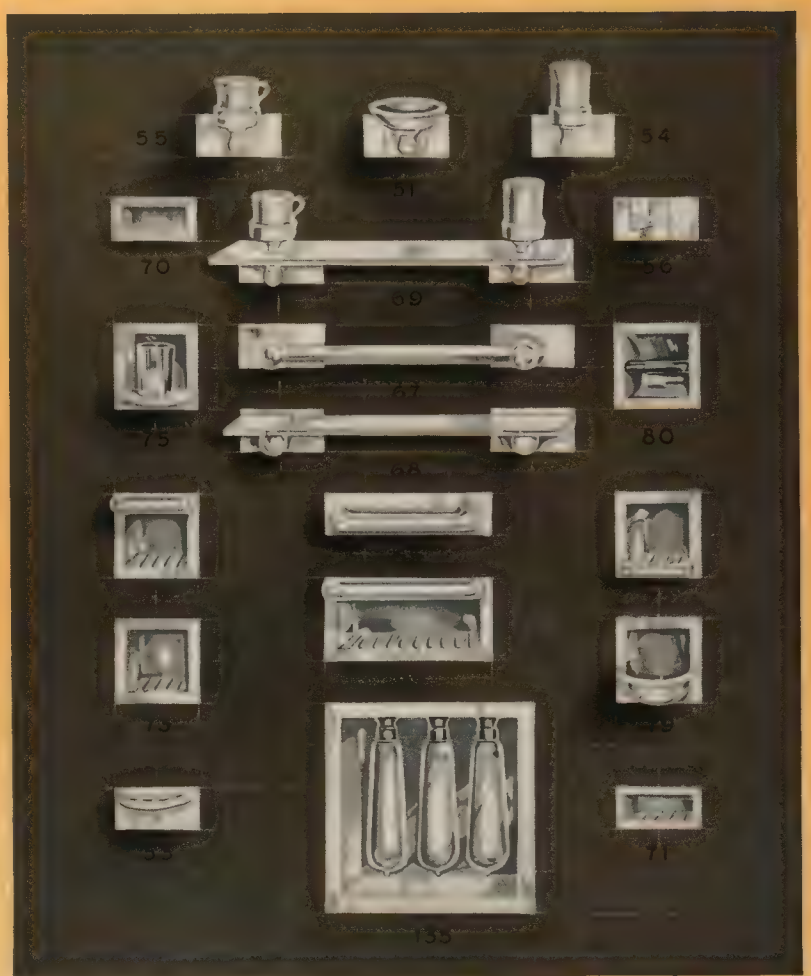

WHITE VITREOUS CHINA "TILE-IN" BATHROOM ACCESSORIES

K-51	Soap Dish and Holder, 6″x3″ back
K-53	Tooth Brush Holder, 6″x3″ back
K-54	Vase and Holder, 6″x3″ back
K-55	Mug and Holder, 6″x3″ back
K-56	Robe Hook, 6″x3″ back
K-65	Grab Rail, 12″x3″ back
K-67	18″x1″ square Towel Bar and Brackets, 6″x3″ backs
	24″x1″ square Towel Bar and Brackets, 6″x3″ backs
	30″x1″ square Towel Bar and Brackets, 6″x3″ backs
	36″x1″ square Towel Bar and Brackets, 6″x3″ backs
K-68	18″x5″ Shelf and Brackets, 6″x3″ backs
	24″x5″ Shelf and Brackets, 6″x3″ backs
	30″x5″ Shelf and Brackets, 6″x3″ backs
	36″x5″ Shelf and Brackets, 6″x3″ backs
K-69	18″x5″ Combination Shelf, Mug and Vase, 6″x3″ backs
	24″x5″ Combination Shelf, Mug and Vase, 6″x3″ backs
	30″x5″ Combination Shelf, Mug and Vase, 6″x3″ backs
	36″x5″ Combination Shelf, Mug and Vase, 6″x3″ backs
K-70	Recess Soap Holder, 6″x3″ flange—full lip
K-71	Recess Soap Holder, 6″x3″ flange—full drain
K-72	Recess Soap Holder, 6″x6″ flange—full lip
K-73	Recess Soap Holder, 6″x6″ flange—full drain
K-75	Recess Tumbler Holder, 6″x6″ flange
K-77	Recess Soap Holder and Grab Rail, 6″x6″ flange
K-79	Recess Sponge Holder, 6″x6″ flange—with drain hole
K-80	Recess Roll Paper Holder, 6″x6″ flange
K-92	Recess Soap Holder and Grab Rail, 12″x6″ flange—flush drain
K-135	Recess Electric Heater, 15″x15″ flange, 5″ deep outside. Furnished with three lamps 110-112 volts—250 watts. Switch and wiring not included. Lamps of higher voltage and wattage can be furnished.

WHITE VITREOUS CHINA TRIMMINGS

Escutcheons

K-642 Waste Escutcheon for all Madbury Lavatories, Manicuring Table and all Bidet fixtures
K-642 For ⅜" I. P.
K-644 For ½" I. P.
K-645 For ¾" I. P.
K-646 For 1¼" O. D. Tubing
K-647 For 1½" O. D. Tubing
K-927 For 1¼" Spud
K-909 For 1½" Spud
K-910 For 2" Spud
K-876 For 1¼" I. P.
K-877 For 1½" I. P.
K-878 For 2" I. P.
K-913 Valve Escutcheon for all Madbury Lavatories, Manicuring Table, Dental Lavatory and all Bidet fixtures
K-924 Transfer Valve Escutcheon for K-2831 Bidet
K-922 Ice Water Valve Escutcheon for Ice Water Lavatories
K-911 Escutcheon for All-china Tank Levers

Handles

K-180 Pull Handle with metal part for K-3112 Tank
K-181 Pull Handle with Rubber Bumper and metal part for High Tanks
K-923 Transfer Valve Handle with metal part for K-2831 Bidet
K-912 Handle with metal part for All-china Tank Levers

Knobs

K-925 Waste Knob with metal part for all Madbury Lavatories, Manicuring Table, and all Bidet fixtures
K-921 Ice Water Knob with metal part for Ice Water Lavatories

Bolt Caps

K-114 1⅛"
K-617 1 5/16" with side cut off
K-119 1 5/16"

TITAN K-914

3¼-inch size

For use on supply valves furnished on Madbury lavatories.

TITAN K-926

2¾-inch size

For use on supply valves furnished on the K-2451 Dental Lavatory, K-2303 Manicuring Table and all Bidet Fixtures.

TITAN K-907

2¾-inch size

For use on stop valves and lavatory faucets.

TITAN K-908

3¼-inch size

For use on bath and lavatory fixtures.

The Titan handle has been especially designed to overcome the danger of breakage.

MADSPRAY K-700

White Vitreous China Shower Head, 4½ inches in diameter, with ½-inch female spud.

MADSPRAY K-701

White Vitreous China Shower Head, 6½ inches in diameter, with ½ or ¾-inch female spud.

K-3090

One-piece White Vitreous China Flush Pipe Cover for Straight Connection.

K-3092

One-piece White Vitreous China Flush Pipe Cover for 1½-inch Offset Connection.

The illustration marked "frontview" shows the front view of both the K-3090 and K-3092 Flush Pipe Covers.

K-3094

White Vitreous China Oval Vent Collar for K-2915 and K-2918 Closet Combinations.

K-3096

White Vitreous China Round Vent Collar for K-3045 Closet Combination.

K-3098

White Vitreous China Lavatory Soap Dish with metal part.

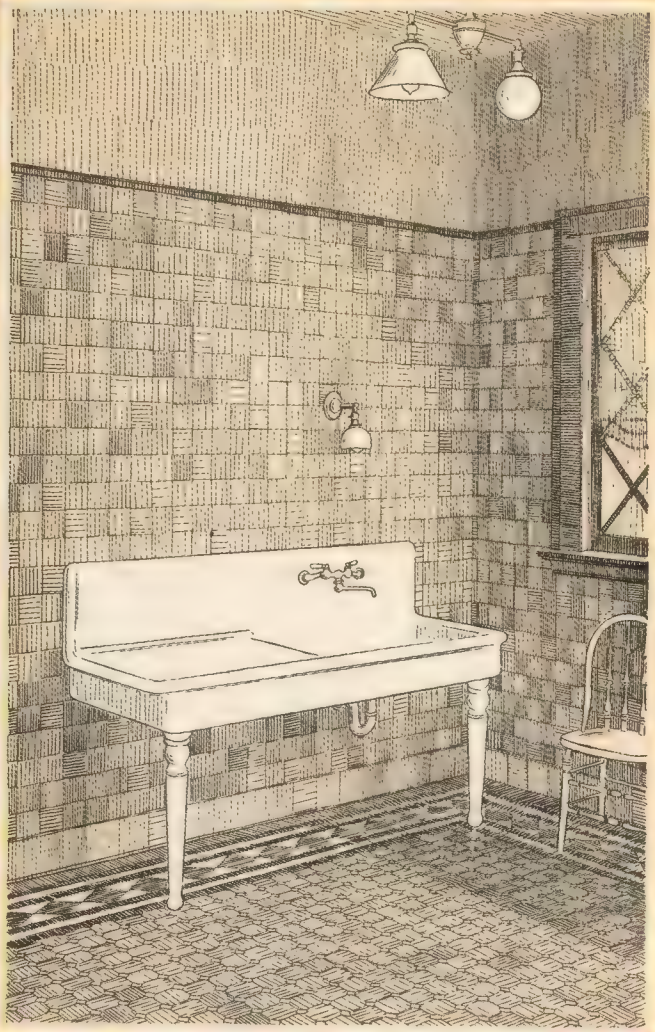

Solid Porcelain FIXTURES

PORNER K-5015

White Porcelain Light Weight Bath with Integral Base; Tiled-in Back, End and Floor, Bottom Outlet

SPECIFICATION:

White Porcelain Light Weight Bath with Integral Base and Square End; to tile-in Back, End and Floor, in right- or left-hand corner; Size (see below), with Bottom Outlet. All exposed surfaces glazed. Fitted with Concealed Compression Supply and Waste Fixture with 1½-inch O. D. Tail-piece on Waste and ½-inch Supply Valves; Waste and Supply Valves having China Cross-arm Handles and Escutcheons. Shower with ½-inch Built-in Compression Valves with China Cross-arm Handles and Escutcheons on front of wall; Bent Arm and 4½-inch White Vitreous China Shower Head; N. P. Brass Curtain Holder with White Duck Curtain with Snaps and Hold-back Hook.

DIMENSIONS:

Length, outside	5′	5′ 6″
Width, outside	31″	31″
Height, outside	19″	19″
Approximate weight, packed, pounds	925	1100

NOTE: This Bath is furnished for either right- or left-hand corner. The fittings may be built in the wall or exposed on the opposite end of the Bath.

PORCESS K-5020

White Porcelain Light Weight Recess Bath with Integral Base; Bottom Outlet

SPECIFICATION:

White Porcelain Light Weight Recess Bath with Integral Base and Square Ends; Size (see below), with Bottom Outlet. All exposed surfaces glazed. Fitted with Concealed Compression Supply and Waste Fixture with 1½-inch O. D. Tail-piece on Waste and ½-inch Supply Valves; Waste and Supply Valves having China Cross-arm Handles and Escutcheons. Shower with ½-inch Built-in Mixing Valve with China Lever Handle, China Shower Head, N. P. Brass Curtain Holder with White Duck Curtain with Snaps and Hold-back Hook.

DIMENSIONS:

Length, outside	5′	5′ 6″
Width, outside	31″	31″
Height, outside	19″	19″
Approximate weight, packed, pounds	925	1100

NOTE: The fittings in this Bath may be built in the wall at either end or may be built in the back wall.

PORSINK K-5025

White Porcelain Roll Rim Kitchen Sink with Integral Back, Integral Drain Board and Porcelain Legs

SPECIFICATION:

White Porcelain Roll Rim Kitchen Sink with 9-inch Integral Back and Integral Drain Board; Size (see below), with two Porcelain Legs and Supports to wall. Fitted with N. P. Brass Quaturn Mixing Faucet with China Indexed Handles, Swinging Spout, China Soap Dish, Rubber Hose and Spray. Connections for ½-inch or ¾-inch Iron Pipe, Female. N. P. Brass Outlet Strainer with Coupling and 1½-inch N. P. Brass "P" Trap to wall with N. P. Brass Escutcheon.

DIMENSIONS:

Sink, inches	22x42	26x53	26x62
Approximate weight, packed complete, pounds	450	620	735

Distance Rim to floor, 35 inches. Other heights if desired.

PORPAN K-5030

White Porcelain Roll Rim Kitchen Sink with Integral Back and Porcelain Legs

SPECIFICATION:

White Porcelain Roll Rim Kitchen Sink with 9-inch Integral Back; Size (see below), with two Porcelain Legs and Supports to wall. Inside depth 7 inches and outside depth 9 inches. Fitted with N. P. Brass Quaturn Mixing Faucet with China Indexed Handles, Swinging Spout, China Soap Dish, Rubber Hose and Spray. Connections for ½-inch or ¾-inch Iron Pipe, Female. N. P. Brass Outlet Strainer with Coupling and 1½-inch N. P. Brass "P" Trap to wall with N. P. Brass Escutcheon.

DIMENSIONS:

Sink, inches	22x27	22x30	26x30	26x36	26x42
Approximate weight, packed complete, pounds .	275	280	315	370	445

Distance Rim to floor, 35 inches. Other heights if desired.

PORDRAIN K-5035

White Porcelain Roll Rim Kitchen Sink with Integral Back, two Integral Drain Boards and Porcelain Legs

SPECIFICATION:

White Porcelain Roll Rim Kitchen Sink with 9-inch Integral Back and two Integral Drain Boards; Size 22x50 inches with two Porcelain Legs and Supports to wall. Fitted with N. P. Brass Quaturn Mixing Faucet with China Indexed Handles, Swinging Spout, China Soap Dish, Rubber Hose and Spray. Connections for ½-inch or ¾-inch Iron Pipe, Female. N. P. Brass Outlet Strainer with Coupling and 1½-inch N. P. Brass "P" Trap to wall with N. P. Escutcheon.

DIMENSIONS:

Sink, inches	22x50
Sink proper, inches	15x20
Approximate weight, packed complete, pounds	490

Distance Rim to floor, 35 inches.

PORCOMB K-5045

White Porcelain Roll Rim Combination Kitchen Sink and Laundry Tray with Integral Back, Wood Drain Board and Porcelain Legs

SPECIFICATION:

White Porcelain Roll Rim Combination Kitchen Sink and Laundry Tray with 6-inch Integral Back and Centre Dividing Partition. Size 24x50 inches with two Porcelain Legs and Supports to wall. Inside depth of Sink 10 inches. Inside depth of Tray 14 inches. Fitted with N. P. Quaturn Faucets for the Sink, N. P. Stub Compression Faucets for the Tray, N. P. Strainer and Coupling, N. P. Outlet Plug and Stopper, N. P. Continuous Waste, 1½-inch N. P. Trap to wall with Escutcheon and Special Wood Drain Board with N. P. Hinges.

DIMENSIONS:

Sink and Tray, inches	24x50
Approximate weight, packed complete, pounds	560

Distance Rim to floor, 34 inches.

PORTUB K-5050

White Porcelain Laundry Trays with Integral Back and Porcelain Legs

SPECIFICATION:

White Porcelain Laundry Trays with 6-inch Integral Back; Size (see below), with Porcelain Legs and Supports to wall. Fitted with N. P. Brass Quaturn Faucets with China Indexed Handles, N. P. Outlet Plugs and Stoppers, N. P. Continuous Waste, 1½-inch N. P. Trap to wall and Heavy Wood Wringer Base.

DIMENSIONS:

Tray, inches	26x26	26x30	26x36
Approximate weight, packed complete, pounds	315	380	420

Distance Rim to floor, 34 inches.

PORTRAY K-5055

White Porcelain All Roll Rim Laundry Trays with Porcelain Legs

SPECIFICATION:
White Porcelain All Roll Rim Laundry Trays; Size (see below), with Porcelain Legs and Supports to wall. Fitted with N. P. Brass Stub Compression Faucets, N. P. Outlet Plugs and Stoppers, N. P. Continuous Waste, 1½-inch N. P. Trap to floor and Heavy Wood Wringer Base.

DIMENSIONS:

Tray, inches	24x24	26x26	26x30	26x36
Approximate weight, packed complete, pounds	275	295	315	350

Distance Rim to floor, 34 inches.

General Instructions

THE information given here is arranged so as to secure for our customers and those using this catalog the fullest degree of service.

Order by plate number whenever possible. When doing so, mention explicitly if we are to furnish everything as shown. We recommend ordering all fixtures complete.

Every effort is put forth to keep all promises of delivery. Failure to keep them from causes beyond our control does not make us liable.

All goods are shipped at buyer's risk.

We have been especially careful in preparing the weights and measurements on all pieces; however, owing to the variations in the manufacture we cannot guarantee them absolutely.

Any goods proving defective when used for the purpose manufactured will be replaced, but no claim for labor or damages will be allowed.

GENERAL INDEX

Bathroom Accessories 224–225
Bath Tubs 232–233
Bidets 86–92
China Trimmings 226–227, 229
Closets 100–184
Dressing Table 52
Drinking Fountains 76–80
Fittings, Lavatory 72–73
Laundry Trays 237–239
Lavatories 10–48, 54–70
Manicuring Table 50
Seats 186–189
Shower Heads 228
Sinks 216–220, 234–237
Tanks 190
Urinals 196–212

Index

Accessories, Bathroom....224–225, 228–229
Accessories, Tile-in Bathroom....225

Baby Closet....116
Barber Lavatories....32–34, 64
Barracks Lavatories....46–48
Bars, Towel....224–225
Bathroom Accessories....224–225, 228–229
Bathroom Accessories, Tile-in....225
Bathroom Trimmings....226–229
Bath Tubs....232–233
Beauty Parlor Lavatory....56
Bidet, Cold Water....90
Bidets....86–92
Bidets, Description of....84–85
Bidet, Transfer Valve....92
Blow-out Closets....180–184
Bolt Caps....226
Bowls, Water Closet (see Closets)

Caps, Bolt....226
Child's Closet....116
China Escutcheons....226
China Handles....226–227
China Knobs....226
China Shower Heads....228
Claims (see General Instructions)
Closet, Baby....116
Closets, Blow-out....180–184
Closet, Child's....116
Closet Combinations....100–108, 118–124, 128–130, 136, 140–142, 146–150
Closets, Flush Valve....110–114, 126, 132–134, 138, 144, 152, 158, 164–166, 172–176, 180–184
Closet, High Tank....156
Closets, History of....96–99
Closets, Integral Seat....154–158
Closets, Low-down Tank....100–108, 116–124, 128–130, 136, 140–142, 146–150, 154, 160–162, 168–170, 178
Closets, Reversed Trap....136–138
Closet Seats....186–189
Closets, Seat Action....114, 134, 176
Closets, Side Inlet....110, 138, 166, 174, 184
Closets, Syphon Action....140–154
Closets, Syphon Jet....100–134, 160–178
Closet Tanks....190
Cold Water Bidet....90
Collars, Vent....229
Combination Lavatory Fixture....72
Combination Sink and Laundry Tray....237
Combinations, Closet....100–108, 116–124, 128–130, 136, 140–142, 146–150, 154, 160–162, 168–170, 178
Comfort Station Lavatory, Public....36
Covers, Flush Pipe....229

Damaged Material (see General Instructions)
Defective Material (see General Instructions)
Dental Lavatory....70
Dentists' Lavatories....36–38
Description of Bidets....84–85
Description of Closets....96–99
Description of Urinals....194–195
Development of Pottery....1–3
Doctors' Lavatories....36–38
Dressing Table....52
Drinking Fountain, Pedestal....76
Drinking Fountain, Prison....67
Drinking Fountains, Wall....78–80

Electric Heater....225
Escutcheons, China....226

Factory Lavatories....46–48
Factory, View of (Frontispiece)
Faucets for Lavatories....72–73
Faucets, Push Button....73
Faucets, Self-closing....72–73
Fittings, Lavatory....72–73
Flush Pipe Covers....229
Flush Valve Closets....110–114, 126, 132–134, 138, 144, 152, 158, 164–166, 172–176, 180–184
Foot Action Urinal....206
Fountain, Pedestal Drinking....76
Fountains, Wall Drinking....78–80

Grab Rails....224–225

Handles, China....226–227
Hand Rails....224–225
Heater, Electric....225
Heads, China Shower....228
High Tank....190
High Tank Closets....156
History of Closets....96–99
History of Pottery....1–3
Holder, Lavatory Soap....229
Holders, Soap....224–225, 229
Holders, Sponge....224–225
Holder, Tumbler....225
Hooks, Robe....224–225
Hoppers (see Closets)
Hospital Lavatories....20, 36–38

Ice Water Lavatories....12, 26, 44
Instructions for Cleansing Overflow....9
Instructions for using Bidets....84–85
Integral Seat Closets....154–158

Juvenile Closet....116
Juvenile Syphon Jet Urinals....208–212

Kitchen Sinks....234–237
Knobs, China....226

Laundry Tray, Combination Sink and . . 237
Laundry Trays 237–239
Lavatories, Barber 32–34, 64
Lavatories, Barracks 46–48
Lavatory, Beauty Parlor 56
Lavatory, Dental 70
Lavatories, Dentists' 36–38
Lavatories, Doctors' 36–38
Lavatories, Factory 46–48
Lavatory Faucets 72–73
Lavatory Fittings 72–73
Lavatory Fixture, Combination 72
Lavatories, Hospital 20, 36–38
Lavatories, Ice Water 12, 26, 44
Lavatory, Manicuring 50
Lavatories, Pedestal 10–14
Lavatory Plugs 73
Lavatory, Prison 64
Lavatory, Public Comfort Station 36
Lavatories, Single Leg 22–46
Lavatory Soap Holder 229
Lavatories, Space Saving 66
Lavatories, Surgical 20, 36–38
Lavatories, Two Leg 16–18
Lavatories, Wall Hanging 54–70
Lavatory Waste Fixture 72–73
Low Tank Closets 100–108, 116–124, 128–130, 136, 140–142, 146–150, 154, 160–162, 168–170, 178
Low Tanks 190

Manicuring Table 50
Mug Holders 224–225

Orders (see General Instructions)
Oval Vent Collar 229
Overflow Cleansing Feature 9

Packing Goods (see General Instructions)
Paper Holders 224–225
Parlor Lavatory, Beauty 56
Pedestal Drinking Fountain 76
Pedestal Urinals 200–212
Plugs, Lavatory 73
Pop-up Waste Fixture 72–73
Porcelain Fixtures 232–239
Pottery, History of 1–3
Prison Closet 158
Prison Drinking Fountain 67
Prison Lavatory 66
Public Comfort Station Lavatory 36

Quick Compression Faucets 73

Rails, Grab 224–225
Reversed Trap Closets 136–138
Robe Hooks 224–225
Rods, Towel 224–225
Roughing Measurements (opposite each Fixture)

Seat Action Closets 114, 134, 176
Seats, Closet 186–189
Self-closing Faucets 72–73
Shelves, Bathroom 224–225
Shower Heads, China 228
Side Inlet Closets 110, 138, 166, 174, 184
Sink and Laundry Tray, Combination . . . 237
Sinks, Kitchen 234–237
Sinks, Slop 216–220
Sink, Syphon Jet Slop 218
Slop Sinks 216–220
Slop Sink, Syphon Jet 218
Soap Holders 224–225, 229
Soap Holder, Lavatory 229
Sponge Holders 224–225
Surgical Lavatories 20, 36–38
Syphon Action Closets 140–154
Syphon Jet Closets 100–134, 160–178
Syphon Jet Slop Sink 218
Syphon Jet Urinal, Foot Action 206
Syphon Jet Urinals 196, 200–212
Syphon Jet Urinals, Juvenile 208–212

Table, Dressing 52
Table, Manicuring 50
Tank Closet, High 156
Tank Closets, Low 100–108, 116–124, 128–130, 136, 140–142, 146–150, 154, 160–162, 168–170, 178
Tank, High 190
Tanks, Low 190
Tile-in Bathroom Accessories 225
Toilet Paper Holders 224–225
Tooth Brush Holders 224–225
Towel Bars 224–225
Transfer Valve Bidet 92
Trays, Laundry 237–239
Trimmings, Bathroom 226–229
Tubs, Bath 232–233
Tumbler Holder 225

Urinals, Description of 194–195
Urinal, Foot Action 206
Urinals, Juvenile Syphon Jet 208–212
Urinals, Pedestal 200–212
Urinals, Syphon Jet 196, 200–212
Urinal, Tank 190
Urinals, Wall Hanging 196–198
Urinals, Women's 208–212

Valve Closets, Flush 110–114, 126, 132–134, 144, 152, 158, 164–166, 172–176, 180–184
Value of Vitreous China Lavatories 6–9
Vase Holders 224–225
Vent Closets 118–120, 178
Vent Collars 229
View of Factory (Frontispiece)

Wall Drinking Fountains 78–80
Wall Hanging Closets 180–184
Wall Hanging Lavatories 54–70
Wall Hanging Urinals 196–198
Wash Basins (see Lavatories)
Wash Trays 237–239
Waste Fixture, Pop-up 72–73
Water Closets (see Closets)
Women's Urinals 208–212

Designed by
The Eugene McGuckin Company
Philadelphia
Plates by Photo-Chromotype Engraving Company
Printed by Edward Stern & Company, Inc.
Paper—Dill & Collins Co.'s Black and White C. B.

KALAMAZOO BINDER

SIZE OR STOCK NO.	STYLE	BINDING
10½x8½	P. L.	Blue Keratol

BAR OR GAUGE	BACK	CAPACITY	COVERS
2-4-2	Closed	¾"	Stiff

SPECIAL ATTACHMENTS

To duplicate this binder order SERIES NO. Y-42794

MADE IN U. S. A.
KALAMAZOO LOOSE LEAF BINDER DIVISION
OF REMINGTON RAND INC., KALAMAZOO, MICH.